MATHEMATICAL THEORY

OF

ELECTRODYNAMIC PHENOMENA,

UNIQUELY DERIVED FROM EXPERIMENTS,

BY ANDRÉ-MARIE AMPÈRE,

OF THE ACADÉMIE ROYALE DES SCIENCES, OF THE SOCIÉTÉ PHILOMATIQUE, OF THE ROYAL SOCIETY OF EDINBURGH, OF THE SOCIÉTÉ HELVÉTIENNE DES SCRUTATEURS DE LA NATURE, OF THE CAMBRIDGE PHILOSOPHICAL SOCIETY, OF THE SECTION DE PHYSIQUE ET D'HISTOIRE NATURELLE DE GENÈVE, OF THE ACADÉMIE ROYALE DES SCIENCES ET BELLES-LETTRES DE BRUXELLES AND OF THE ACADÉMIE ROYALE DE LISBONNE, CHEVALIER DE LA LÉGION-D'HONNEUR, PROFESSOR AT THE ÉCOLE POLYTECHNIQUE AND AT THE COLLÈGE DE FRANCE.

1st edn:

MÉQUIGNON-MARVIS, LIBRAIRE-ÉDITEUR, RUE DU JARDINET, N° 13.
and BRUXELLES, AU DÉPÔT GÉNÉRAL DE LIBRAIRIE MÉDICALE FRANÇAISE.

NOVEMBER 1826.

AND

2nd edn:

PARIS

A. HERMANN, Librarie Scientifique
8, RUE DE LA SORBONNE, 8

1883

1st: IMPRIMERIE DE FIRMIN DIDOT, RUE JACOB, N° 24.
2nd: IMPRIMERIE C. MARPON ET E. FLAMMARION
24, RUE RACINE, A PARIS

MATHEMATICAL THEORY

OF THE PHENOMENA OF

ELECTRO-DYNAMICS

UNIQUELY

DEDUCED FROM EXPERIMENTS

BY

ANDRÉ-MARIE AMPÈRE

SECOND EDITION

CONFORMING TO THE FIRST EDITION PUBLISHED IN 1826

PARIS

A. HERMANN, Librarie Scientifique

8, RUE DE LA SORBONNE, 8

1883

translation by Michael D. Godfrey
@Copyright 2012

TRANSLATOR'S PREFACE

CONTENTS OF THE PREFACE

1. Introduction v

2. Historical Notes vii

3. Explanation of changes in and additions to the original text vii

4. Correction History ix

1.0 Introduction

Ampere's Treatise of 1826 had a profound effect on the development of Electricity and Magnetism. Maxwell expressed it thus:

> The experimental investigation by which Ampère established the law of the mechanical action between electric currents is one of the most brilliant achievements in science. The whole, theory and experiment, seems as if it had leaped, full grown and full armed, from the brain of the 'Newton of Electricity'. It is perfect in form, and unassailable in accuracy, and it is summed up in a formula from which all the phenomena may be deduced, and which must always remain the cardinal formula of electrodynamics.
>
> [J. C. Maxwell, *A Treatise on Electricity and Magnetism,* Dover, New York, 1954, vol.2, p.175]

It was recently found that Ampere's Treatise had not been translated into English in full. More seriously, the *Google Books* images do not contain the Figures. Thus the explanations of the experiments, which are the sole point of the treatise, cannot be understood. Original copies of the treatise are only available at major libraries, and typically are not allowed for circulation. A few parts of the treatise were translated in Tricker[1]. This was a book on early electrodynamics prepared for English school children, and it contains reproductions of eleven of the Figures (figs. 1–6 and 29–33). These are the figures referenced in the parts which were translated. This publication is useful, but is no longer in print. Nevertheless Google classifies the treatise as under copyright. It is available on the web (at abebooks.com, for instance).

[1] Tricker, R. A. R., *Early Electrodynamics, The First Law of Circulation,* Pergamon Press, Oxford, 1965.

The *Stanford Library Special Collections Section* (not accessible to Google) showed in the online Catalog that it had 2 copies, one in the "Newton" collection and one in the "Samuel I. and Cecile M. Barchas" collection. They are both under the same catalog index number and therefore the Library believed that they were both the same edition. The date given was 1826. As it turned out the Newton Collection contains a first edition, in quite poor condition, but the Barchas Collection contains 2 copies, one a first edition and the other a second edition. Both of these copies are in surprisingly good condition. Since all the copies were cataloged under one index number, it was a bit difficult to explain to the Library staff which copy I wanted, particularly since the copy I really wanted was not known by them to exist. However, they were very cooperative and patient. I was able to obtain the Barchas first edition and, after several tries, I obtained 1x1 imaged high-resolution (800ppi TIFF) images of the Figures from both Barchas editions. With these Figures and copies of the text of both editions, I had all of the available information.

It was evident that a readable copy of this fundamental work would be of long-term value. And, a translation into English would also be helpful. An effective plan would be to create PDF copies using TEX which would also include fully readable figures. The text of the two editions is identical except for typos, and for significant parts of the appended "Some New Developments on the Subjects treated in the Preceding Treatise" (title as in the 2nd editions). I have used the Notes from the other editions. In fact, the changes in the Notes were first made in the version of the Treatise which appeared in the *Mémoires de L'Académie des Sciences de L'Institut de France*, tome 6, année 1823, 1827. The changes include Ampere's improved understanding of the proof of the inverse square law for the electromagnetic force, and other improvements. The Section III, *(Application of this transformation...)* in the first edition was not included in the other editions. Also, the second edition lacked a table of contents which appeared in the first edition.

Thus, the plan involved the following steps: start from the first edition but with the "Notes" from the second edition, using Adobe Acrobat Professional to OCR the text. This text was sent to *Google Translate*. The result was of use in that Google Translate would fail to translate most incorrectly OCR'ed strings. This was useful as an OCR and spelling check. However, after fairly complete spelling correction, the Google translation was not of much use as a meaningful translation. But, *Google Translate* has been extremely helpful in suggesting translations of individual words and phrases. Next, of course, all the mathematics had to be entered by hand. Then, the two Plates showing the Figures, of size about $11'' \times 17''$, required editing and conversion to PDF. These are now in the form of the two original Plates, at the original scale but set to display at $8.5'' \times 11''$, each Figure is in a separate PDF so that each can be placed on a separate page, and finally versions of the 2 Plates in PDF which are set to print at $11'' \times 17''$. These provide about 1.5 times higher resolution than the $8.5'' \times 11''$ ones. Next, the text and equations were proofread to yield near final copy. It is certain that typos still exist and additional proofreading will be needed. This has been done, in part, while carrying out the remaining translation.

Hyperlinks are provided to allow locating Sections, textual references, references to the Figures, and the Figures themselves.

The translation was then completed. Use was made, after substantial editing, of parts of the Tricker partial translation. All of the text was compared with the French text during the preparation and editing of the files. Technically, single TEX files are used for both languages. Each file contains a conditional flag which determines whether the original French or the translated text should be used. Generally, the conditional statements enclose each paragraph

or the text between displayed equations. None of the displayed equations are conditional.

If generated in draft form, the translation contains marginal notes in the text which provide the page numbers of the matching text in the original first edition, and indications about the translation. This is useful for editing and checking. These are not present the final version.

2.0 Historical Notes

The web site *Ampère et l'histoire de l'électricité* (www.ampere.cnrs.fr) contains a great deal of information concerning Ampere and his works. I noticed this web site only after I had completed a complete draft of this work. An important historical fact that I found on the site is that Ampere's publication[2] is an exact reprinting of his series of papers in the *Académie royale des Sciences.*[3] Only the page numbers were changed. Through this web site I learned of Andre Koch Torres Assis, Institute of Physics, University of Campinas who has produced an excellent translation of Ampere's Treatise into Portuguese.[4] He has also produced other work concerning Ampere. See his web site.

Thus, it appears that there are just two versions of the Treatise, and the two versions only differ in the appended "Notes." The first edition, was published under two titles, "Théorie des phénomènes électrodynamiques" and "Théorie mathématique des phénomènes électrodynamiques." Both are dated 1826. The second edition contains the same text with a number of typographical corrections and the revised "Notes." The second editions started with the publication in the *Académie royale des Sciences, tome 6*, 1823. This volume was published in 1827. The editions with the revised "Notes" can all be viewed as second editions, but the first to explicitly state "second edition" is the 1883 publication.

3.0 Explanation of changes in and additions to the original text

3.1 Changes to the text

In the text itself only minor typographical errors were found and corrected. Both the First and Second editions were used in checking this. The Table of Contents from the First edition was reformatted, moved to the front, and hyperlinked. There is no Table of Contents in the Second edition.

3.2 Indices of and Corrections to the Figures

The Figures are shown on 2 Plates bound at the back of the treatise (pgs. 113–114 in this version). The first Plate contains Figures 1–16, and the second contains 17–44. These were originally foldout Plates of approximately 11x17 inches. (The fact they were foldouts is the reason why they were not imaged by Google.) The *Stanford Library Special Collections Services* imaged them, at 1x1 ratio, and at 800ppi TIFF. In order to reduce the size of the files there are two versions: one with the two Plates and the individual Figures all in one PDF, and another composed of a PDF without the Plates and Figures, but with

[2] THÉORIE MATHÉMATIQUE DES PHÉNOMÈNES ÉLECTRODYNAMIQUES UNIQUEMENT DÉDUITE DE L'EXPÉRIENCE, CHEZ FIRMIN DIDOT, PÈRE ET FILS, LIBRAIRES, 1827.

[3] Meetings of the *Académie royale des Sciences*, 4 and 26 December 1820, 10 June 1822, 22 December 1823, 12 September and 28 November 1825.

[4] Andre Koch Torres Assis and João Paulo Martins de Castro Chaib, *Electrodinãmica de Ampère,* Editora da Unicamp, Campinas, Brazil.

these as separate PDF files in a separate folder. This version also has hyperlinks that allow referencing the Plates and Figures from the PDF, and they are configured so that they can be viewed without replacing the current window. The Plates and Figures are as in the original publication, with corrections and cleanup of the objects. In any case, the Figures can be scaled up for closer examination.

Hyperlinks are used in the text to provide easy access to the Plates and Figures. The links are set to open a new window so that the figures may be viewed along with the text.

Indices of the Figures and of names used in the text have been added.

The important corrections are as follows:

fig. 4 Figure 4 had M and N as labels at the edges of the table, but this conflicted with the use on M and N within the equipment. The labels on the table edges were changed to $\mathtt{M}'$ and $\mathtt{N}'$. The three circular circuits should have contained, from left to right, the labels: $\mathtt{O}'', \mathtt{O}', \mathtt{O}$. The front circular tab on the cantilever should have been labeled a. And, the circular part of the cantilever should have been labeled bcg. All of these labels are referred to in the text but were not present in the Figure.

fig. 20 There are 3 labels e, d, and p and their primes which are hard to see, but they are there. Actually, they were missing from the 1st edition but included in the 2nd. I copied them over. The p's are located at the center of the 2 disks. The e and d's are located at the ends of the upper conductors, just above the S and $\mathtt{S}'$.

fig. 21 This figure had missing labels in the 1st edn. These (e, e', d, d') are present in the 2nd edition, so they were copied over. Also, O and $\mathtt{O}'$ were missing and copied from the 2nd edition. And, p and p' were missing from the centers of the lower disks. These labels can only be seen after magnification.

fig. 40 Figure 40 had $\mathtt{T}'$ and T transposed. This is correct in the 2nd edition. But, also, it should have a label Z. (See last Paragraph on pg. 86, or pg. 168 of the 1st edn.) The text indicates that Z is opposite from R with respect to A. I inserted the label Z.

Correction History

1. March 2015: Several clarifications of the English Chapter titles(Ch. 3, 4, 9, 10, 12, 16, 19, 21, 22, and Sect. III of the Notes) were made and a few minor typos were corrected. These changes were suggested by André Koch Torres Assis.
2. May 2015: André Koch Torres Assis completed his major work on Ampere[1] which includes a new version of this translation. In doing this he provided another set of very helpful corrections to the English text. One correction to the French text was also detected. And, one typo in the mathematics was found: In Section 14, pg. 42, the equation following "in the general formula" the r in the denominator should be r^n. And, in Section 14, pg. 49 there were 3 occurrences of `AB` which should have been `AR`. These were not in displayed math so they occurred in both English and French. And, I noticed that I had not always applied notation corrections to the individual figures after correcting the 2 Plates. This affected figs. 20, 25, 36, 40, 41, and 42. All of the changes were to missing or incorrect labels.
3. July 2015: While reviewing André Koch Torres Assis' new book I found that he had corrected several typographical errors in math derivations which we had not previously detected. In each case the final results were correct, but typos appeared in the derivations. I thank André for his very careful working through of the derivations and I have incorporated his corrections.

Michael D. Godfrey
Statistics Department
Stanford University
michaeldgodfrey@gmail.com
Archive: archive.org/details/@m_d_godfrey
Website: drive.google.com/drive/my-drive

January 2021

---

[1] A. K. T. Assis and J. P. M. C. Chaib, *AMPÈRES ELECTRODYNAMICS: Analysis of the Meaning and Evolution of Ampères Force between Current Elements, together with a Complete Translation of His Masterpiece, Theory of Electrodynamic Phenomena Uniquely Deduced from Experiments*, 2015

TABLE OF CONTENTS

CONTENTS OF THIS VOLUME

1. Exposition of the path followed in research into the laws of natural phenomena and the forces that they produce 1

2. Description of the experiments from which one finds four cases of equilibrium which yield the laws of action to which are due the electrodynamic phenomena 6

3. Development of the formula which expresses the mutual interaction of two elements of voltaic currents 11

4. Relation given by the third case of equilibrium between the two unknown constants which enter in this formula 16

5. General formulas which represent the action of a closed voltaic circuit or of a system of closed circuits on an electric current element 18

6. Experiments by which one verifies a consequence of the formulas 21

7. Application of the preceding formulas to a circular circuit 23

8. Simplification of the formulas when the diameter of the circular circuit is very small 24

9. Application to a planar circuit which forms a closed surface of arbitray shape, at first in the case where the dimensions are all very small, and then when they are of any size whatsoever 25

10. Mutual interaction of two closed circuits located in the same plane, first assuming that all the dimensions are very small, and then in the case where the two circuits are of any form and size whatsoever 28

11. Determination of the two unknown constants which enter into the fundamental formula 29

12. Action of a conducting wire which forms a segment of a circle on a rectilinear conductor passing through the center of the segment 29

13. Description of an instrument designed to verify the results of the theory for conductors of this form 31

14. Interaction of two rectilinear conductors 32

15. Action exerted on an element of a wire conductor by an assembly of closed circuits of very small dimensions, which have been designated by the name electrodynamic solenoid 50

16. Action on a solenoid exerted by an element or by a finite portion of a conducting wire, a closed circuit or a system of closed circuits 53

17. Interaction of two soleniods 56

18. Identity of solenoids and magnets when the effect on them is from conducting wires, or by other solenoids or other magnets. Discussion of the consequences that can be drawn from this identity, relative to the nature of magnets and of the action that one observes between the earth and a magnet or a conducting wire 57

19. Identity of the exerted actions, either on the pole of a magnet, or on the extremity of a solenoid, by a closed voltaic circuit and by an assembly of two closely-spaced surfaces that terminate this circuit, and on which two fluids are widely spread and connected to the magnetic fluids, taken as the two magnetic fluids, austral and boreal, in a manner such that the magnetic intensity is everywhere the same 68

20. Examination of the three hypotheses that are proposed concerning the nature of the interaction of a wire conductor element and what one calls a *magnetic molecule* ... 79

21. Impossibility of producing an indefinitely accelerating movement due to the interaction of a closed rigid circuit and a magnet, or of such a circuit and an electrodynamic solenoid 81

22. Examination of the different cases where an indefinitely accelerating movement can result from the action that a voltaic circuit, of which a part is movable with respect to the rest of the circuit, exerts on a magnet or on an electrodynamic solenoid 82

23. Identity of the mutual interaction of two closed electric circuits and of two assemblages each composed of two very closely spaced surfaces terminated by the circuit to corresponding to each assemblage, and on which are distributed and fixed two magnetic fluids, austral and boreal, in such a manner that the magnetic intensity is everywhere the same 95

24. Impossibility of producing an indefinitely accelerating movement by the interaction of two rigid and closed electric circuits and, consequentially, by any assemblages of circuits of this kind 97

25. Experiments which confirm the theory which attributes the properties of magnets to electric currents, proving that a spiral or helical conducting wire carrying a current, attached to a moving metallic disc shows a movement exactly like that discovered by M. Arago between a disc and a magnet 99

26. General consequences of these experiments and calculations relative to electrodynamic phenomena 100

NOTES

CONTAINING

SOME NEW DEVELOPMENTS ON THE SUBJECTS TREATED IN THE PRECEDING TREATISE

I. *On the method of demonstrating using the four equilibrium cases explained at the beginning of this Treatise, that the value of the mutual action of two elements of conducting wires is*

$$-\frac{2ii'}{\sqrt{r}} \cdot \frac{d^2\sqrt{r}}{ds\,ds'} ds\,ds' \quad \ldots\ldots 103$$

II. *On a proper transformation which simplifies the calculation of the mutual action of two rectilinear conductors* 105

III. *On the direction of the straight line designated in this treatise given the name of* **electrodynamic action director at a given point**, *where this action is that of a closed and planar circuit in which all of the dimensions are very small* 106

IV. *On the value of the force applied by an indefinite angular conductor to the pole of a small magnet* 108

Figure and Name Indices 112

TREATISE

ON THE MATHEMATICAL THEORY

OF

ELECTRO-DYNAMIC PHENOMENA

UNIQUELY DERIVED FROM EXPERIMENTS

The collected works of M. Ampère from his communications to the Académie royale des Sciences, Sessions of 4 and 26 December 1820, 10 June 1822, 22 December 1823, 12 September and 28 November 1825.

---

1. Exposition of the path followed in research into the laws of natural phenomena and the forces that they produce

The era of Newton's work was marked in the history of science as not only that of the most important discoveries made by man concerning the causes of the major natural phenomena; it was also the era in which human imagination opened up a new method in the sciences which has as its object the study of these phenomena.

Previously the causes of natural phenomena had been sought almost exclusively in the impulse of an unknown fluid which entrained material particles in the same direction as its own particles; and wherever rotational motion was observed, one imagined a vortex in the same direction.

Newton taught us that motion of this kind, like all motions in nature, must be reducible by calculation to forces acting always between two material particles along the straight line between them, such that the action of one upon the other is equal and opposite to that which the latter exerts at the same time upon the former and, consequently, assuming the two particles to be in a fixed association between each other, that no motion whatsoever can result from their interaction. It is this law, now confirmed by every observation and every calculation, which he presented in the last of the three axioms at the beginning of the *Philosophiæ naturalis principia mathematica*. But this was not sufficient for it to be raised to this high conception, the law had to be found which governs the variation of these forces with the respective situations of the particles between which they act, or, what amounts to the same thing, to express the value by a formula.

Newton was far from thinking that this law could be discovered from abstract considerations, however plausible they might be. He established that such laws must be deduced

from observed facts, or preferably, from empirical laws, like those of Kepler, which are only the generalized results of a large body of facts.

First observe the facts, while varying the conditions to the extent possible, accompany this first effort with precise measurement in order to deduce general laws based solely on experiments, and deduce therefrom, independently of all hypotheses regarding the nature of the forces which produce the phenomena, the mathematical value of these forces, that is to say, the formula which represents them, this was the path followed by Newton. This was the approach generally adopted by the scholars of France to whom physics owes the immense progress which has been made in recent times, and similarly it has guided me in all my research into electrodynamic phenomena. I have relied solely on experimentation to establish the laws of the phenomena and from them I have derived the formula which alone can represent the forces which are produced; I have not investigated the possible cause of these forces, convinced that all research of this nature must proceed from pure experimental knowledge of the laws and from the value, determined solely by deduction from these laws, of the individual forces in the direction which is, of necessity, that of a straight line drawn through the material points between which the forces act. That is why I shall refrain from discussing any ideas which I might have on the nature of the cause of the forces produced by voltaic conductors, though this is contained in the notes which accompany the *Exposé sommaire des nouvelles expériences électromagnétiques faites par plusieurs physiciens depuis le mois de mars* 1821, which I read at the public session of the Académie des Sciences, 8 April 1822; one can see what I said in these notes on page 215 of my *Collection of Electrodynamic Observations.* It does not appear that this approach, the only one which can lead to results which are independent of all hypotheses, is preferred by physicists in the rest of Europe as it is by the French; the famous scientist who first saw the poles of a magnet transported by the action of a conductor in directions perpendicular to those of the wire, concluded that electrical matter revolved about it and pushed the poles along with it, just as Descartes made the matter of his vortices revolve in the direction of planetary revolution. Guided by Newtonian philosophy, I have reduced the phenomenon observed by M. Ørsted, as has been done for all similar natural phenomena, to forces acting along a straight line joining the two particles between which the actions are exerted; and if I have established that the same arrangement, or the same movement of electricity, which exists in the conductor is present also around the particles of the magnets, it is certainly not to make them act by impulsion in the manner of a vortex, but to calculate, according to my formula, the resultant forces acting between the particles of a magnet and those of a conductor, or of another magnet, along the lines joining the particles in pairs which are considered to be interacting, and to show that the results of the calculation are completely verified by 1° the experiments of M. Pouillet and my own into the precise determination of the conditions which must exist for a moving conductor to remain in equilibrium when acted upon, whether by another conductor, or by a magnet, and 2° by the agreement between these results and the laws which Coulomb and M. Biot have deduced by their experiments, the former relating to the interaction of two magnets, and the latter to the interaction between a magnet and a conductor.

The principal advantage of formulæ which are thus concluded directly from some general facts gained from sufficient observations for their certitude to be incontestable, is that they remain independent, not only of the hypotheses which may have aided in the quest for these formulæ, but also independent of those which may later be substituted. The expression for universal attraction deduced from Kepler's laws does not depend at all on hypotheses which some writers have advanced since they wanted to assign a mechanical cause. The theory of

heat is founded on general facts which have been obtained by direct observation; the equation deduced from these facts, confirmed by the agreement between the results of calculation and of experiment, must be equally accepted as expressing the true laws of heat propagation, and by those who attribute it to the radiation of calorific molecules, and by those who take the view that the phenomenon is caused by the vibration of a fluid diffused in space; it is only necessary for the first to show how the equation results from their view and for the second to derive it from the general formulæ for vibratory motion; doing so does not add anything to the certainty of the equation, but only substantiates the respective hypotheses. The physicist who refrains from committing himself in this respect, acknowledges the heat equation to be an exact representation of the facts without concerning himself with the manner in which it can result from one or other of the explanations of which we are speaking; and if new phenomena and new calculations should demonstrate that the effects of heat can in fact only be explained in a system of vibrations, the great physicist who first produced the equation and who created the methods of integration to apply it in his research, is still just as much the author of the mathematical theory of heat, as Newton is still the author of the theory of planetary motion; even though the theory was not as completely demonstrated by his works as his successors have been able to do in theirs.

It is the same for the formula by which I represented electrodynamic action. Whatever the physical cause to which the phenomena produced by this action might be ascribed, the formula which I have obtained will always remain the expression of the facts. If it should later be derived from one of the considerations by which so many other phenomena have been explained, such as attraction by inverse square of the distance, those which become unaffected at any appreciable distance between particles between which forces are exerted, the vibration of a fluid diffused in space, etc., another step forward will have been made in this field of physics; but this inquiry, in which I myself am no longer occupied, though I fully recognize its importance, will change nothing in the results of my work, since to be in agreement with the facts, it must always be that the adopted hypothesis must be in accord with the formula which fully represents them.

From the time when I recognized that two voltaic conductors act on each other, sometimes attracting and sometimes repelling, since I distinguished and described the actions which they exert in the various positions where they can be found with respect to each other, and after I had established that the action exerted by a straight conductor is equal to that exerted by a sinuous conductor whenever the latter only diverges by very short distances from the direction of the former and both terminate at the same points, I have been seeking to express the value of the attractive or repellent force between two elements, or infinitesimal parts, of conducting wires by a formula so as to be able to derive by the known methods of integration, the action which takes place between two portions of conductors of a given form and position.

The impossibility of conducting direct experiments on infinitesimal portions of a voltaic circuit makes it necessary to proceed from observations of conductors of finite dimension and to satisfy two conditions, namely that the observations be capable of great precision and that they be appropriate to the determination of the interaction between two infinitesimal portions of wires. It is possible to proceed in either of two ways: one is first to measure values of the mutual action of two portions of finite dimension with the greatest possible exactitude, by placing them successively, one in relation to the other, at various distances and in various positions, for it is evident that the interaction does not depend solely on distance, and then to advance a hypothesis as to the value of the mutual action of two infinitesimal

portions, to derive the value of the action which must result for the test conductors of finite dimension, and to modify the hypothesis until the calculated results are in accord with those of observation. It is this procedure which I first proposed to follow, as explained in detail in the paper which I read at the Académie des Sciences 9 October 1820(1); though it leads to the truth only by the indirect route of hypothesis, it is no less valuable because of that, since it is often the only way open in investigations of this kind. A member of this Académie, whose works have covered the whole range of physics has aptly expressed this in the *Notice sur l'aimantation imprimée aux métaux par l'électricité en mouvement*, which he read 2 April 1821, saying that prediction of this kind was the aim of practically all physical research(2).

However, the same end can be reached more directly by the path which I have since followed: it consists in establishing by experiment that a moving conductor remains exactly in equilibrium between equal forces, or between equal rotational moments, these forces and these moments being produced by portions of fixed conductors whose shape and dimension may be arbitrarily varied without the equilibrium being disturbed, under the conditions determined by the experiment, and determining directly by calculation what the value of the mutual action of the two infinitesimal portions must be for equilibrium to be, in fact, independent of all variations of shape and dimension compatible with these conditions.

This last procedure can only be adopted when the nature of the action being studied is such that cases of equilibrium which are independent of the shape of the body are possible; it is therefore of much more restricted application than the first method which I discussed; but since voltaic conductors do permit equilibrium of this kind, it is natural to prefer the simpler and more direct method which is capable of great exactitude if ordinary precautions are taken for the experiments. There is, however, in connection with the action of conductors, a much more important reason for employing it in the determination of the forces which produce their action: it is the extreme difficulty associated with experiments where it is proposed, for example, to measure the forces by the number of oscillations of the body which is subjected to the actions. This difficulty is due to the fact that when a fixed conductor is made to act upon the moving portion of a circuit, the pieces of apparatus which are necessary for connection to the battery act on the moving portion at the same time as the fixed conductor, thus altering the results of the experiments. I believe, however, that I have succeeded in overcoming this difficulty in a suitable apparatus for measuring the mutual action of two conductors, one fixed and the other moving, by the number of oscillations in the latter for various shapes of the fixed conductor. I shall describe this apparatus in the course of this treatise.

It is true that the same obstacles are not encountered when the action of a conducting wire on a magnet is measured in the same way; but this method cannot be employed when it comes to determining the forces which two conductors exert upon each other, the question which must be our first consideration in the investigation of new phenomena. It is evident that if the action of a conductor on a magnet is due to some other cause than that which produces the effect between two conductors, experiments performed with respect to a conductor and magnet can add nothing to the study of two conductors; if magnets only owe their properties to electric currents, which encircle each of their particles, it is necessary, in

(1) This paper has not been published separately, but the principal results are included in vol. XV of the Annales de chimie et de physique (1820), (See Part 2; Section 3).

(2) See Journal des Savants, p. 233, April 1821.

order to draw definite conclusions as to the action of the conducting wire on these currents, to be sure that these currents are of the same intensity near to the surface of the magnet as within it, or else to know the law governing the variation of intensity; whether the layouts of the currents are everywhere perpendicular to the axis of a bar magnet, as I at first supposed, or whether the mutual action of the currents of the magnet itself inclines them more to the axis when at a greater distance from this axis, which is what I have since concluded from the difference which is noticeable between the position of the poles on a magnet and the position of the points which are endowed with the same properties in a conductor of which one part is helically wound(1).

(1) I should insert here the following note which is an analysis extracted from work of the Académie during 1821, published on 8 April 1822. (See the mathematical part of this analysis, pg. 22–23.)

> ≪The main difference between the manner of action of a magnet and that of a conductor such that one part is coiled into a helix around another part, consists in that the poles of the former are located more closely to the mid-point of the magnet than toward its extremities, whereas the points that provide the same properties in the helix are located exactly at the extremities of the helix : this produces the effect that the current in the magnet diminishes from the midpoint towards the extremities. But M. Ampere has since recognized another cause which could produce this effect. After having completed his new experiments which showed that the current in a magnet exists at each of its particles, it was easy for him to see that it was not necessary to assume, as previously had been done, that the planes of the currents are everywhere perpendicular to the axis of the magnet; their mutual action tends to yield planes inclined to the axis, particularly at the extremities, so that the poles, instead of being exactly situated, as they should be, based on the results of the formulas given by M. Ampere, one may assume that all the currents of the same intensity and in the planes perpendicular to the axis, should approach the region of the magnet along its length will be larger than the planes of a large number of inclined currents, and they dominate, that is to say, as the magnet becomes thicker with respect to its length, this conforms to the observed behavior. In the helical conductor, where one part returns along the axis in order to cancel the effect of the currents of each coil which acts as if they were parallel to this axis, these two conditions, according to what we just stated, are not necessarily located within the magnets, but exist instead necessarily within the wires: it is also observed in the experiments that the helices have poles similar to those of the magnets, but located exactly at their extremities as shown by the calculations.≫

One sees from this note, from the year 1821, that I had concluded that the phenomena show that magnets :

1° in considering each particle of a bar magnet as a magnet, the axes of these elementary magnets should be, not parallel to the axis of the entire magnet as had been assumed, but positioned in directions inclined to this axis and in directions as determined by their mutual interaction;

2° that this effect is one of the causes that the poles of a bar magnet are not located at its extremities, but between the extremities and the mid-point of the magnet.

2. Description of the experiments from which one finds four cases of equilibrium which yield the laws of action to which are due the electrodynamic phenomena

The various cases of equilibrium which I have found by precise experiments provide the laws leading directly to the mathematical expression for the force which two elements of conducting wires exert upon each other, in that they first make the form of this expression known and then allow the initially unknown constants to be determined, just as Kepler's laws show in the first place that the force which holds the planets in their orbits tends constantly towards the center of the sun, since it varies for a particular planet as the inverse square of its distance to the solar center, so that the constant coefficient which represents its intensity has the same value for all planets. These cases of equilibrium are four in number: the first demonstrates the equality in absolute value of the attraction and repulsion which is produced when a current flows alternately in opposite directions in a fixed conductor the distance to the body on which it acts remaining constant. This equality results from the simple observation that two equal portions of one and the same conductor which are covered in silk to prevent contact, whether both straight, or twisted together to form around each other two equal helices, in which the same electric current flows, but in opposite directions, exert no action on either a magnet or a moving conductor; this can be established by the moving conductor which is illustrated in Plate I, fig. 9 of the Annales de chimie et de physique vol. XVIII, relating to the description of my electrodynamic apparatus, and which is introduced here (Pl. 1 pg. 113, fig. 1 pg. 115). For this, a horizontal straight conductor AB, repeated several times over, is placed slightly below the lower part $dee'd'$ such that its mid-point in length and thickness is in the vertical line through the points x, y about which the moving conductor turns freely. It is seen that this conductor stays in the position where it is placed, which proves that there is equilibrium between the actions exerted by the fixed conductor on the two equal and opposite portions of the circuit $bcde$ and $b'c'd'e'$ which differ only in that the current flows towards the fixed conductor in the one, and away from it in the other, whatever the angle between the fixed conductor and the plane of the moving conductor: now, considering first the two actions exerted between each portion of the circuit and the half of the conductor AB which is the nearest, and then the two actions between each of the two portions and the half of the conductor which is the furthest away, it will be seen without difficulty 1° that the equilibrium under consideration cannot occur at all angles except in so far as there is equilibrium separately between the first two actions and the last two; 2° that if one of the first two actions is attractive because current flows in the same direction along the sides of the acute angle formed by the portions of the conductors,the other will be repellent because the current flows in opposite directions along the two sides of the equal and opposite angle at the vertex, so that, for there to be equilibrium, the first two actions which tend to make the moving conductor turn, the one in one direction, and the other in the opposite direction, must be equal to each other; and the last two actions, the one attractive and the other repellent, between the sides of the

---

Both of these assertions are today fully demonstrated by the formulas deduced by M. Poisson and by which he has derived the distribution, in the magnets, of the forces originating from each of their particles. These formulas are based on Coulomb's law, and as a consequence, nothing is changed when one adopts the explanation of magnetic effects that I have given, since this law is a consequence of my formula, as will be shown later in this Treatise.

two obtuse and opposite angles at the vertex and the complements of those about which we have just been speaking, must also be equal to each other. Needless to say, these actions are really sums of products of forces which act on each infinitesimal portion of the moving conductor multiplied by their distance to the vertical about which this conductor is free to turn; however, the corresponding infinitesimal portions of the two arms $bcde$ and $b'c'd'e'$ always being at equal distances from the vertical about which they turn, the equality of the moments makes it necessary that the forces are equal.

The second of the three general cases of equilibrium was indicated by me towards the end of the year 1820; it consists in the equality of the actions exerted on a moving straight conductor by two fixed conductors situated the same distance away from it, of which one is also straight, but the other bent in any manner. This was the apparatus by which I verified the equality of the two actions in the precise experiments, the results of which were communicated to the Académie in the session of 26 December 1820.

The two wooden posts, PQ,RS (Pl. 1 pg. 113, fig. 2 pg. 116), are slotted on the sides which mutually face each other, the straight wire bc being laid in the slot of PQ, and the wire $k\,l$ in that of RS, over its entire length this wire is twisted in the plane perpendicular to that joining the two axes of the posts, such that the wire at no point departs more than a very short distance from the mid-point of the slot.

These two wires serve as conductors for the two portions of a current which is made to repel the part GH of a moving conductor consisting of two almost closed and equal rectilinear circuits BCDE, FGHI in which the current flows in opposite directions so that the effect of the earth on these two circuits cancels out. At the two extremities of this moving conductor there are two points A and K which are immersed in the mercury-filled cups M and N and soldered to the extremities of the copper arms gM, hN. These arms make contact via the copper bushings g and h, the first with the copper wire gfe, helically wound around the glass tube hgf, the other with the straight wire hi which goes through the inside of this tube to the trough ki made in the piece of wood vw which is fixed at the desired height against the pillar z with the set screw o. In view of the experiment to which I referred above, the portion of the circuit composed of the helix gf and the straight wire hi can exert no action on the moving conductor. For current to flow in the fixed conductors bc and kl, the connecting wires of these conductors are continued by cde, lmn in two glass tubes(1) attached to the cross-piece xy, finally terminating, the first in cup e and the other in cup n. With everything so arranged, one places mercury in all cups and inside the two troughs ba and ki, and one plunges the positive rheophore pa in the trough ba which is also inserted in the piece of wood vw, and the negative rheophore qn in the trough n The current flows through the conductors of the apparatus in the following order: $pabcdefg$MABCDEFGHIKN$hildmnq$; as a result, the current flows up the two fixed conductors and down that part, GH, of the moving conductor which is acted upon in its position midway between the two fixed conductors and lies in the plane which passes through their axes. The part GH is thus repelled by bc and kl, whence it follows that if the action of these two conductors is the same at equal distances, GH must remain midway between them; this is, in fact, what happens.

It is good to point out: 1° that though the two axes of the fixed conductors are the same distance from GH, it cannot be stated with rigor that the distance is the same for all

(1) These tubes are used to prevent flexure of the enclosed wires by holding them at equal distances from the two conductors bc, kl, so that their actions on GH, which reduce that of these two conductors, should reduce them equally.

points of the conductor kl owing to its contours and bends. But since these bends are in a plane perpendicular to the plane through GH and through the axes of the fixed conductors, it is evident that the resulting difference in distance is as small as possible and as much less than half of the width of the slot RS as this half is less than the interval between the two posts (this difference, in the case when it is the largest possible, is equal to that between the radius and the secant of an arc with tangent equal to half the width of the slot and belonging to a circle of which the diameter is the interval between the two posts); 2° that if each infinitesimal portion of the conductor kl is resolved in the same way as a force could be resolved, into two minute portions which are projections, the one along the vertical axis of the conductor and the other along horizontal lines drawn through all points of the conductor in the plane in which it is bent, the sum of the first projections (taking as negative those which, being in the opposite direction, must act in the opposite direction), will be equal to the length of this axis; hence the total action resulting from all these projections is the same as that of a straight conductor equal to the axis, that is to say, it is equal to that of the conductor be situated on the other side at the same distance from GH. The other projections will have zero effect on the moving conductor GH since the planes erected vertically at the mid-point of each of them pass approximately through GH. The joining of these two series of projections thus produces an action on GH equal to that of be; and since experiment also proves that the sinuous conductor kl produces an action equal to that of be, whatever its bends and contours, it follows that it acts in all cases like the combination of the two series of projections, which cannot occur independently of the manner in which the conductor is bent unless each part of it acts separately as the resultant of its two projections.

For this experiment to have the desired exactitude, it is necessary for the two posts to be exactly vertical and at precisely the same distance from the moving conductor. To fulfill these conditions, a support $\alpha\beta$ is matched to the cross-piece xy and the posts are fixed by two clamps η and θ, and two adjustable screws λ, μ, so that the posts may be moved apart or brought closer together at will, keeping the same distance from the mid-point γ of the support $\alpha\beta$. The apparatus is so constructed that the two posts are perpendicular to the cross-piece xy, and this is made horizontal by the screws at the four corners of the base of the device and the plumb line XY which corresponds exactly to a point Z as conveniently marked on the base with the cross-piece xy perfectly level.

For the conductor ABCDEFGHIK to revolve about a vertical axis at an equal distance from the two conductors bc, kl, this conductor is suspended by a very fine metal wire attached to the center of a knob T which can rotate without altering the distance between the two conductors; this knob is at the center of a small dial O, on which the letter L marks the place where it is necessary to stop in order that the part GH of the moving conductor should hang, without the suspension being twisted, at the mid-point of the interval between the two fixed conductors bc, kl in order to be able immediately to return the needle to the position in which it should be whenever it is desired to repeat the experiment. It is checked that GH is an equal distance from bc and kl by another plumb line $\psi\omega$ which is attached to the copper arm $\varphi\chi\psi$: carried, like the dial O, on the support UVO, in which this arm is free to revolve about the axis of the knob φ at the end of it, thus making it possible to have the plumb-line ω correspond to the line $\gamma\delta$ in the mid-point of the support $\alpha\beta$. When the conductor is in the appropriate position, the three verticals $\psi\omega$, GH and CD are in the same plane, as can easily be checked by placing one's eye in this plane in front of $\psi\omega$.

The moving conductor is thus arranged beforehand in the position where it will be in equilibrium between the repulsions of the two fixed conductors, if these repulsions are

exactly equal these actions are then produced by immersing into the trough *ba* and the cup *n* respectively the wires *ap* and *nq* which connect to the two extremities of the battery, and the conductor GH is found to remain in this position despite the great mobility associated with suspensions of this kind. If the mark L is displaced, even slightly, which brings GH into a position which is no longer equidistant between the fixed conductors bc, kl, it is seen to move as soon as communication with the battery is established, swinging away from whichever conductor is the nearest. At the time when I had this device constructed, I established in this way that the actions of the two conductors are equal from sufficient experiments with all the necessary precautions, for there to be no doubt about the result.

The same law can also be demonstrated by a simple experiment for which it is sufficient to take a silk-covered copper wire and to wind a part around the straight portion without being separated from it other than by the silk. It is then found that another portion of the wire does not affect the assembly of two portions; and since it would be the same for an assembly of two straight wires with a similar electric current in opposite directions (from the experiment by which the first case of equilibrium was very simply established), it follows that the action of the current in the wound portion is exactly equal to that of the current in the straight part between identical extremities, because the action of both these two conductors would be counterbalanced by the action of the current in a straight portion of equal length, but in the opposite direction.

The third case of equilibrium is that a closed circuit of any arbitrary shape cannot produce movement in a portion of conducting wire which is in the form of an arc of a circle whose center lies on a fixed axis about which it may turn freely and which is perpendicular to the plane of the circle of which the arc forms part.

On a foot TT′ (Pl. 1 pg. 113, fig. 3 pg. 117), in the form of a table, two columns EF and E′F′ are erected which are joined by the cross-pieces LL′,FF′; an upright GH is held in the vertical position between these two cross-pieces. Its two pointed extremities G,H fit into two tapered holes, one in the lower cross-piece LL′, the other in the extremity of the screw KZ carried by the upper traverse FF′ which locates the upright GH without locking it. At C a support QO is fixed rigidly to this upright. At its extremity O is a hinge which engages the mid-point of the circular arc AA′ (formed by a metal wire) which remains constantly in the horizontal position and the distance from the point O to the axleGH in radius. This arc is held in equilibrium by the counterweight Q, thus reducing the friction of the upright GH in the tapered holes where its extremities are held.

Below the arc AA′ there are two small troughs M,M′ which are filled with mercury so that the surface of the mercury, rising above the brim, just touches the arc AA′ at B and B′. These two small troughs are connected by the metallic conductors MN,M′N′ to the cups P,P′, which are full of mercury. The cup P and the conductor MN, which connects it to the trough M, are fixed to a vertical upright which is bedded in the table, but leaving it free to turn. The cup P′, to which the conductor M′N′ is connected, is traversed by the same upright, about which it, too, can revolve independently. The cup is insulated from the upright by the glass tube V which envelopes it, and by the glass ring U which separates it from the conductor of the trough M so as to be able to arrange the conductors MN,M′N′ at any desired angle.

Two other conductors IR and I′R′, attached to the table, are immersed respectively in the cups P and P′ and connect them to the cavities R,R′ which are made in the table and filled with mercury. Finally, a third cavity S, likewise full of mercury, is situated in between the other two.

This apparatus is used in the following way: one of the battery rheophores, say, the positive rheophore, is immersed in the cavity R, whilst the negative rheophore is immersed in S, which is made to communicate with the cavity R′ by a curvilinear conductor of arbitrary shape. The current follows the conductor RI, passes into the cup P, and thence to the conductor MN, the trough M, the conductor M′N′, the cup P′, the conductor I′R′ and finally from the cavity R′ into the curvilinear conductor which connects to the mercury of the cavity S, where the negative rheophore of the battery is immersed.

With this arrangement the total circuit is formed by:

1° The arc BB′ and the conductors MN,M′N′;

2° A circuit consisting of the parts RIP and P′I′R′ of the apparatus, the curvilinear conductor from R′ to S and the battery itself.

This latter circuit must act as a closed circuit since it is only interrupted by the glass which insulates the two cups P,P′; it is therefore sufficient to observe its action on the arc BB′ to determine the action of a closed circuit on an arc in various positions in relation to each other.

When by means of the hinge O the arc AA′ is positioned such that its center lies outside the axis GH, the arc moves and slides on the mercury of the troughs M,M′ owing to the action of the closed curvilinear current flowing from R′ to S. If, however, its center is on the upright; it remains stationary; hence, the two portions of the closed circuit which tend to make it turn in opposite directions about the axis, exert on these rotational moments on this arc which are equal in absolute value, no matter what the magnitude of the part BB′, as determined by the opening of the angle of the conductors MN,M′N′. If, therefore, two arcs BB′ are taken in succession which hardly differ from each other, since the rotational moment is zero for both of them, it will also be zero for the slight difference between them, and, in consequence, it is likewise zero for any element of circumference with center on the axis; hence the direction of the action exerted by the closed circuit on the element is along the upright and it is necessarily perpendicular to the element.

When the arc AA′ is positioned so that its center is on the upright, the conductors MN,M′N′ exert equal, but opposite, repulsion on the arc BB′ with the result that no effect is produced; since no movement occurs, it is certain that no moment of rotation is produced by the closed circuit.

When the arc AA′ moves in the other situation which we envisaged, the actions of the conductors MN and M′N′ are no longer equal; it could be thought that the movement was due solely to this difference if the movement did not increase, or decrease, according as the curvilinear circuit from R′ to S comes nearer or moves further away, which leaves no doubt that the closed circuit plays a prominent part in the effect.

This result, occurring for any length of the axis AA′, will necessarily occur for each of the elements of which the arc is composed. The general conclusion may therefore be drawn that the action of a closed circuit, or of an assembly of closed circuits, on an infinitesimal element of an electric current is perpendicular to this element.

It is by the fourth case of equilibrium, about which I have still to speak, that the constant coefficients occurring in my formula may be finally determined without recourse, as I first had to have, to experiments where a magnet and a conductor interact. Here is the device by which this determination may be made resting solely on observation of the interaction of two conductors.

A cavity A is made in the table M′N′ (Pl. 1 pg. 113, fig. 4 pg. 118), the cavity is filled with mercury and from it runs the fixed conductor ABCDEFG made from a sheet of copper. The part CDE is circular, and the parts CBA and EFG are insulated from each other by a silk covering. At G this conductor is soldered to the copper tube GH, which carries the cup I which is in contact with the tube by means of the copper support HI. The moving conductor IKLMNPQRS, of which the part MNP is circular, starts from the cup I; the parts MLK and PQR are insulated by a silk covering. The conductor is held horizontal by the counterweight *a* fixed on the circumference of a circle formed around the tube GH by the continuation *bcg* of the sheet constituting the moving conductor. The cup S is supported by the rod ST which has the same axis as GH, but from which it is insulated by a resinous substance which is poured into the tube. The base of the rod ST is soldered to the fixed conductor TUVXYZA′, which passes out of the tube GH through an opening large enough for the resin to insulate it as completely at this place as in the rest of the tube GH with regard to ST. At the outlet from the tube this conductor is covered with silk to prevent contact between the portions TUV and YZA′. The portion VXY is circular and the extremity A′ is immersed in the mercury-filled cavity A′ in the table.

The centers O, O′, O″ of the three circular portions are in a straight line; the radii of the circles which they form are in continuous geometric proportion and the moving conductor is first placed in such a way that the distances OO′, O′O″ bear the same relation to each other as consecutive terms in this proportion; hence the circles O and O′ form a system similar to that of the circles O′ and O″. The positive battery rheophore is then immersed in A with the negative rheophore in A′, and the current flows in succession through the circles with centers at O, O′, O″, which repel each other in pairs, because the current flows in the opposite direction in neighboring parts.

The purpose of the experiment is to prove that the moving conductor remains in equilibrium in the position where the ratio of OO′ to O′O″ is the same as that of the radii of two consecutive circles, and that if it is moved away from this position, it returns to it after oscillating about it.

3. Development of the formula which expresses the mutual interaction of two elements of voltaic currents

I will now explain how to deduce rigorously from these cases of equilibrium the formula by which I represent the mutual action of two elements of voltaic current, showing that it is the only force which, acting along the straight line joining their mid-points, can agree with the facts of the experiment. First of all, it is evident that the mutual action of two elements of electric current is proportional to their length; for, assuming them to be divided into infinitesimal equal parts along their lengths, all the attractions and repulsions of these parts can be regarded as directed along one and the same straight line, so that they necessarily add up. This action must also be proportional to the intensities of the two currents. To express the intensity of a current as a number, suppose that another arbitrary current is chosen for comparison, that two equal elements are taken from each current, and that the ratio is required of the actions which they exert at the same distance on a similar element of any other current if it is parallel to them, or if its direction is perpendicular to the straight lines which join its mid-point with the mid-points of two other elements. This ratio will be the measure of the intensity of one current, assuming that the other is unity.

Let us put i and i' for the ratios of the intensities of two given currents to the intensity of the reference current taken as unity, and put $\mathrm{d}s$ and $\mathrm{d}s'$ for the lengths of the elements which are considered in each of them; their mutual action, when they are perpendicular to the line joining their mid-points, parallel to each other and situated a unit distance apart, is expressed by $ii'\mathrm{d}s\mathrm{d}s'$; we shall take the sign + when the two currents, flowing in the same direction, attract, and the sign − in the other case.

If it is desired to relate the action of the two elements to gravity, the weight of a unit volume of suitable matter could be taken for the unit of force. But then the current taken as unity would no longer be arbitrary; it would have to be such that the attraction between two of its elements $\mathrm{d}s, \mathrm{d}s'$, situated as we have just said; could support a weight which would bear the same relation to the unit of weight as $\mathrm{d}s\mathrm{d}s'$ bears to 1. Once this current is determined, the product $ii'\mathrm{d}s\mathrm{d}s'$ would denote the ratio of the attraction of two elements of arbitrary intensity, still in the same situation, to the weight which would have been selected as the unit of force.

Suppose we now consider two elements placed arbitrarily; their mutual action will depend on their lengths, on the intensities of the currents of which they are part, and on their relative position. This position can be determined by the length r of a straight line joining their mid-points, the angles θ and θ' between a continuation of this line and the direction of the two elements in the same direction as their respective currents, and finally by the angle ω between the planes drawn through each of these directions and the straight line joining the mid-points of the elements.

Consideration of the diverse attractions and repulsions observed in nature led me to believe that the force which I was seeking to represent, acted in some inverse relation to distance; for greater generality, I assumed that it was in inverse relation to the nth power of this distance, n being a constant to be determined. Then, taking ρ for the unknown function of the angles θ, θ', ω, I took $\frac{\rho ii'\mathrm{d}s\mathrm{d}s'}{r^n}$ as the general expression for the action of two elements $\mathrm{d}s, \mathrm{d}s'$ of the two currents with intensity i and i' respectively. It remained to determine the function ρ. For that I shall first consider two elements $ad, a'd'$ (Pl. 1 pg. 113, fig. 5 pg. 119), parallel to each other, perpendicular to the straight line joining their mid-points, and a distance r apart; their action being represented in accordance with the foregoing remarks by $\frac{ii'\mathrm{d}s\mathrm{d}s'}{r^n}$, I assumed that ad remained fixed and that $a'd'$ was transported parallel to itself in such a way that its mid-point was always the same distance from the mid-point of ad; ω being always zero, the value of their mutual action could depend only on the angles represented above by θ, θ' and which, in this case, are equal, or complements of each other, according as the currents flow in the same or opposite direction; in this way I obtained the value $\frac{ii'\mathrm{d}s\mathrm{d}s'\varphi(\theta,\theta')}{r^n}$. By putting k for the positive or negative constant to which $\varphi(\theta, \theta')$ is reduced when the element $a'd'$ is at $a'''d'''$ on the continuation of ad and in the same direction, I obtained $\frac{kii'\mathrm{d}s\mathrm{d}s'}{r^n}$ to represent the action of ad on $a'''d'''$; in this expression the constant k represents the ratio of the action of ad on $a'''d'''$ to that of ad on $a'd'$, a ratio which is independent of the distance r, the intensities i, i' and of the lengths $\mathrm{d}s$, $\mathrm{d}s'$ of the two elements under consideration.

These values of the electrodynamic action are sufficient, in the two simplest cases, for finding the general form of the function ρ by reason of the experiment, which shows that the attraction of an infinitely small rectilinear element is the same as that of any other sinuous element, terminating at the ends of the first, and the theorem which I have just established, namely that an infinitely small portion of current exerts no action on another infinitesimal

portion of a current which is situated in a plane which passes though its mid-point and which is perpendicular to its direction. In fact, the two halves of the first element produce equal actions on the second, the one attractive and the other repellent, because the current tends to approach the common perpendicular in one of these halves and to move away from it in the other. These two equal forces form an angle which tends to two right angles according as the element tends to zero. Their resultant is therefore infinitesimal in relation to these forces and in consequence it can be neglected in the calculations. Let $\mathtt{M}m$ (Pl. 1 pg. 113, fig. 6 pg. 119) $= \mathrm{d}s$ and $\mathtt{M}'m' = \mathrm{d}s'$ represent two elements of electric currents with mid-points at $\mathtt{A}$ and $\mathtt{A}'$; suppose that the plane $\mathtt{MA}'m$ passes along the straight line $\mathtt{AA}'$ which joins them; and through the element $\mathtt{M}m$. We replace the portion of current $\mathrm{d}s$ which flows through this element by its projection $\mathtt{N}n = \mathrm{d}s\cos\theta$ on the straight line $\mathtt{AA}'$ and its projection $\mathtt{P}p = \mathrm{d}s\sin\theta$ on the perpendicular erected at $\mathtt{A}$ to this straight line in the plane $\mathtt{MA}'m$; we then replace the portion of current $\mathrm{d}s'$ which flows through $\mathtt{M}'m'$ by its projection $\mathtt{N}'n' = \mathrm{d}s'\cos\theta'$ on the straight line $\mathtt{AA}'$ and its projection $\mathtt{P}'p' = \mathrm{d}s'\sin\theta'$ on the perpendicular to $\mathtt{AA}'$ drawn through the point $\mathtt{A}'$ on $\mathtt{AA}'$ in the plane $\mathtt{M}'\mathtt{A}m'$; finally, we replace the latter by its projection $\mathtt{T}'t' = \mathrm{d}s'\sin\theta'\cos\omega$ in the plane $\mathtt{MA}'m$ and its projection $\mathtt{U}'u' = \mathrm{d}s'\sin\theta'\sin\omega$ on the perpendicular to this plane through the point $\mathtt{A}'$; according to the foregoing law, the two elements $\mathrm{d}s$ and $\mathrm{d}s'$ exert the same action as the two portions of current $\mathrm{d}s\cos\theta$ and $\mathrm{d}s\sin\theta$ exert together on the three portions $\mathrm{d}s'\cos\theta'$, $\mathrm{d}s'\sin\theta'\cos\omega$, $\mathrm{d}s'\sin\theta'\sin\omega$ since the latter has its mid-point in the plane $\mathtt{MA}m$ to which it is perpendicular, no action occurs between it and the two portions $\mathrm{d}s\cos\theta$, $\mathrm{d}s\sin\theta$ which are in this plane. For the same reason, there can be no action between the portions $\mathrm{d}s\cos\theta$, $\mathrm{d}s'\sin\theta'$, nor between the portions $\mathrm{d}s\sin\theta$, $\mathrm{d}s'\cos\theta'$, since, imagining a plane through the straight line $\mathtt{AA}'$ perpendicular to the plane $\mathtt{MA}'m$, $\mathrm{d}s\cos\theta$, $\mathrm{d}s'\cos\theta'$ are in this plane and the portions $\mathrm{d}s'\sin\theta'\cos\omega$ and $\mathrm{d}s\sin\theta$ are perpendicular to it with their mid-points in this same plane. The action of the two elements $\mathrm{d}s$ and $\mathrm{d}s'$ therefore reduces to the two joint remaining actions, namely the interaction between $\mathrm{d}s\sin\theta$, and $\mathrm{d}s'\sin\theta'\cos\omega$ and between $\mathrm{d}s\cos\theta$, and $\mathrm{d}s'\cos\theta'$, these two actions both being along the straight line $\mathtt{AA}'$ joining the mid-points of the currents between which they are exerted, and it suffices to add these to obtain the mutual action of the two elements $\mathrm{d}s$ and $\mathrm{d}s'$. Now the portions $\mathrm{d}s\sin\theta$ and $\mathrm{d}s'\sin\theta'\cos\omega$ are in one and the same plane and both are perpendicular to the straight line $\mathtt{AA}'$; accordingly, their mutual action along this straight line is

$$\frac{ii'\,\mathrm{d}s\mathrm{d}s'\sin\theta\sin\theta'\cos\omega}{r^n}$$

and that of the two portions $\mathrm{d}s\cos\theta$ and $\mathrm{d}s'\cos\theta'$ along the same line $\mathtt{AA}'$, is

$$\frac{ii'k\mathrm{d}s\mathrm{d}s'\cos\theta\cos\theta'}{r^n},$$

thus the interaction of the two elements $\mathrm{d}s$, $\mathrm{d}s'$ is necessarily represented by

$$\frac{ii'\,\mathrm{d}s\mathrm{d}s'}{r^n}\left(\sin\theta\sin\theta'\cos\omega + k\cos\theta\cos\theta'\right).$$

This formula is simplified by introducing ϵ for the angle between the two elements in place of ω; for, by considering the spherical triangle with sides $\theta, \theta', \epsilon$, we have

$$\cos\epsilon = \cos\theta\cos\theta' + \sin\theta\sin\theta'\cos\omega;$$

hence

$$\sin\theta\sin\theta'\cos\omega = \cos\epsilon - \cos\theta\cos\theta'$$

substituting this in the foregoing formula and putting $k-1=h$, we get

$$\frac{ii'\,\mathrm{d}s\,\mathrm{d}s'}{r^n}\left(\cos\epsilon + h\cos\theta\cos\theta'\right),$$

It is good to point out that a change of sign occurs when one of the currents, say that of the element $\mathrm{d}s$, takes the diametrically opposite direction, for at that time $\cos\theta$ and $\cos\epsilon$ change sign, whilst $\cos\theta'$ remains the same. This value of the mutual action of the two elements has only been obtained by the substitution of projections for the element itself; but it may be inferred without difficulty that an element can be replaced by some polygonal contour, or by some curve which terminates at the same extremities, provided that all the dimensions of this polygon or curve are infinitesimal.

Suppose, in fact, that $\mathrm{d}s_1, \mathrm{d}s_2, \ldots, \mathrm{d}s_m$ are different sides of the infinitesimal polygon which is substituted for $\mathrm{d}s$; $\mathtt{A}\mathtt{A}'$ may always be regarded as in the same direction as the lines joining the respective mid-points of the sides with $\mathtt{A}'$.

Let $\theta_1, \theta_2, \ldots, \theta_m$ be the angles which they form respectively with $\mathtt{A}\mathtt{A}'$; and $\epsilon_1, \epsilon_2, \ldots, \epsilon_m$ be those which they form with $\mathtt{M}'m'$; using to denote a sum of terms of like form, the sum of the actions of the sides $\mathrm{d}s_1, \mathrm{d}s_2, \ldots, \mathrm{d}s_m$ on $\mathrm{d}s'$, is

$$\frac{ii'\,\mathrm{d}s'}{r^n}\left(\Sigma\mathrm{d}s_i\cos\epsilon_i + h\cos\theta'\Sigma\mathrm{d}s_i\cos\theta_i\right).$$

Now $\Sigma\mathrm{d}s_i\cos\epsilon_i$, is the projection of the polygonal contour on the direction of $\mathrm{d}s'$ and, in consequence, it is equal to the projection of $\mathrm{d}s$ on the same direction, that is to say, it is equal to $\mathrm{d}s\cos\epsilon$; likewise $\Sigma\mathrm{d}s_i\cos\theta_i$ is equal to the projection of $\mathrm{d}s$ on $\mathtt{A}\mathtt{A}'$ which is $\mathrm{d}s\cos\theta$; the action exerted on $\mathrm{d}\mathtt{s}'$ by the polygonal contour terminated at the extremities of $\mathrm{d}\mathtt{s}$ may therefore be represented as

$$\frac{ii'\,\mathrm{d}s'}{r^n}\left(\mathrm{d}s\cos\epsilon + h\mathrm{d}s\cos\theta\cos\theta'\right)$$

and it is the same as that of $\mathrm{d}s$ on $\mathrm{d}s'$.

Since this conclusion is independent of the number m of sides $\mathrm{d}s_1, \mathrm{d}s_2, \ldots, \mathrm{d}s_m$, it also applies to an infinitesimal arc of a curve.

It could likewise be proved that the action of $\mathrm{d}s'$ on $\mathrm{d}s$ can be replaced by that which an infinitesimal curve, having the same extremities as $\mathrm{d}s'$, would exert on each element of the small curve which we have just substituted for $\mathrm{d}s$, and which would therefore be exerted on this small curve itself. Thus, the formula which we have obtained expresses the fact that a curvilinear element produces the same effect as an infinitesimal portion of rectilinear current with the same extremities, whatever the values of the constants n and h. The experiment by which this result has been reached cannot therefore help in the determination of these constants.

We shall therefore have to utilize two of the other cases of equilibrium which we have discussed. But first we shall transform the foregoing expression for the action of two elements of voltaic currents by introducing the partial differentials of the distance of these two elements.

Let x, y, z be the coordinates of the first point, and x', y', z' those of the second. We get:

$$\cos\theta = \frac{x-x'}{r}\frac{\mathrm{d}x}{\mathrm{d}s} + \frac{y-y'}{r}\frac{\mathrm{d}y}{\mathrm{d}s} + \frac{z-z'}{r}\frac{\mathrm{d}z}{\mathrm{d}s},$$

$$\cos\theta' = \frac{x-x'}{r}\frac{\mathrm{d}x'}{\mathrm{d}s'} + \frac{y-y'}{r}\frac{\mathrm{d}y'}{\mathrm{d}s'} + \frac{z-z'}{r}\frac{\mathrm{d}z'}{\mathrm{d}s'},$$

but since

$$r^2 = (x-x')^2 + (y-y')^2 + (z-z')^2,$$

by successively taking the partial differential coefficients with respect to s and s',

$$r\frac{\mathrm{d}r}{\mathrm{d}s} = (x-x')\frac{\mathrm{d}x}{\mathrm{d}s} + (y-y')\frac{\mathrm{d}y}{\mathrm{d}s} + (z-z')\frac{\mathrm{d}z}{\mathrm{d}s},$$

$$r\frac{\mathrm{d}r}{\mathrm{d}s'} = (x-x')\frac{\mathrm{d}x'}{\mathrm{d}s'} + (y-y')\frac{\mathrm{d}y'}{\mathrm{d}s'} + (z-z')\frac{\mathrm{d}z'}{\mathrm{d}s'},$$

therefore

$$\cos\theta = \frac{\mathrm{d}r}{\mathrm{d}s}, \quad \cos\theta' = \frac{\mathrm{d}r}{\mathrm{d}s'}.$$

To obtain the value of $\cos\epsilon$, note that

$$\frac{\mathrm{d}x}{\mathrm{d}s}, \frac{\mathrm{d}y}{\mathrm{d}s}, \frac{\mathrm{d}z}{\mathrm{d}s}, \text{ and } \frac{\mathrm{d}x'}{\mathrm{d}s'}, \frac{\mathrm{d}y'}{\mathrm{d}s'}, \frac{\mathrm{d}z'}{\mathrm{d}s'}$$

are the cosines of the angles formed by $\mathrm{d}s$, and $\mathrm{d}s'$ with the three axes, and it follows that

$$\cos\epsilon = \frac{\mathrm{d}x}{\mathrm{d}s}\frac{\mathrm{d}x'}{\mathrm{d}s'} + \frac{\mathrm{d}y}{\mathrm{d}s}\frac{\mathrm{d}y'}{\mathrm{d}s'} + \frac{\mathrm{d}z}{\mathrm{d}s}\frac{\mathrm{d}z'}{\mathrm{d}s'}.$$

Now, differentiating with respect to s' the foregoing equation which gives $r\frac{\mathrm{d}r}{\mathrm{d}s}$, it is found that

$$r\frac{\mathrm{d}^2 r}{\mathrm{d}s\mathrm{d}s'} + \frac{\mathrm{d}r}{\mathrm{d}s}\cdot\frac{\mathrm{d}r}{\mathrm{d}s'} = -\frac{\mathrm{d}x}{\mathrm{d}s}\cdot\frac{\mathrm{d}x'}{\mathrm{d}s'} - \frac{\mathrm{d}y}{\mathrm{d}s}\cdot\frac{\mathrm{d}y'}{\mathrm{d}s'} - \frac{\mathrm{d}z}{\mathrm{d}s}\cdot\frac{\mathrm{d}z'}{\mathrm{d}s'} = -\cos\epsilon.$$

If in the formula for the mutual action of two elements $\mathrm{d}s, \mathrm{d}s'$, we substitute for $\cos\theta, \cos\theta'$, $\cos\epsilon$, the values which have just been obtained, and putting $k = 1 + h$, the formula for the mutual action of the two elements $\mathrm{d}s, \mathrm{d}s'$ becomes,

$$-\frac{ii'\mathrm{d}s\mathrm{d}s'}{r^n}\left(r\frac{\mathrm{d}^2 r}{\mathrm{d}s\mathrm{d}s'} + k\frac{\mathrm{d}r}{\mathrm{d}s}\cdot\frac{\mathrm{d}r}{\mathrm{d}s'}\right),$$

which can be written as

$$-\frac{ii'\mathrm{d}s\mathrm{d}s'}{r^n}\cdot\frac{1}{r^{k-1}}\cdot\frac{\mathrm{d}\left(r^k\frac{\mathrm{d}r}{\mathrm{d}s}\right)}{\mathrm{d}s'},$$

or finally

$$ii'r^{1-n-k}\frac{\mathrm{d}\left(r^k\frac{\mathrm{d}r}{\mathrm{d}s}\right)}{\mathrm{d}s'}\mathrm{d}s\mathrm{d}s'.$$

It could also be given the following form:

$$-\frac{ii'}{1+k}r^{1-n-k}\frac{\mathrm{d}^2\left(r^{1+k}\right)}{\mathrm{d}s\mathrm{d}s'}\mathrm{d}s\mathrm{d}s'.$$

4. Relation given by the third case of equilibrium between the two unknown constants which enter in this formula

Let us now examine the result of the third case of equilibrium which shows that the componant of the action of a closed circuit on an element in the same direction as this element is always zero, whatever the form of the circuit. Putting $\mathrm{d}s'$ for the element in question, the action of an element $\mathrm{d}s$ of the closed circuit on $\mathrm{d}s'$ is, according to the foregoing,

$$-ii'\,\mathrm{d}s'r^{1-n-k}\frac{\mathrm{d}\left(r^k\frac{\mathrm{d}r}{\mathrm{d}s'}\right)}{\mathrm{d}s}\mathrm{d}s,$$

or, substituting $\frac{\mathrm{d}r}{\mathrm{d}s'}$ with $-\cos\theta'$,

$$-ii'\,\mathrm{d}s'r^{1-n-k}\frac{\mathrm{d}(r^k\cos\theta')}{\mathrm{d}s}\mathrm{d}s;$$

the component of this action along $\mathrm{d}s'$ is obtained by multiplying this expression by $\cos\theta'$, and becomes

$$-ii'\,\mathrm{d}s'r^{1-n-k}\cos\theta'\frac{\mathrm{d}(r^k\cos\theta')}{\mathrm{d}s}\mathrm{d}s.$$

This differential, integrated over the circuit s, yields the total tangential compondent and it must be zero whatever the form of the circuit. Integrating it by parts, having written it thus

$$-ii'\,\mathrm{d}s'r^{1-n-2k}r^k\cos\theta'\frac{\mathrm{d}(r^k\cos\theta')}{\mathrm{d}s}\mathrm{d}s,$$

we then have

$$\frac{1}{2}ii'\,\mathrm{d}s'\left[r^{1-n}\cos^2\theta'-(1-n-2k)\int r^{-n}\cos^2\theta'\,\mathrm{d}r\right].$$

The first term $r^{1-n}\cos^2\theta'$ vanishes at the limits. As for the integral $\int r^{-n}\cos^2\theta'\,\mathrm{d}r$, it is very easy to imagine a closed circuit for which it does not reduce to zero. In fact, if this circuit is cut by very close spherical surfaces with center at the mid-point of the element $\mathrm{d}s'$, the two points at which each of these spheres cuts the circuit, give the same value for r and equal values and opposite signs for $\mathrm{d}r$; but the values of $\cos^2\theta'$ may be different and the squares of all the cosines corresponding to the points situated on one side of the extreme points of the circuit may be made less than those relative to the corresponding points on the other side in an infinite number of ways; now, in this case, the integral does not vanish; and as the above expression must be zero, whatever the form of the circuit, the coefficient $1-n-2k$ of this integral must therefore be zero, which gives between n and k the first relation $1-n-2k=0$.

Before looking for a second equation for determination of these two constants, we start by proving that k is negative, and, as a consequence that $n=1-2k$ is greater than 1; we will use the fact that is easily experimentally determined, that a rectilinear indefinite conductor attracts a closed circuit, when the current in this circuit flows in the same direction as the nearest conductor, and repels in the opposite case.

For UV (Pl. 1 pg. 113, fig. 7 pg. 119) an indefinite rectilinear conductor assume for simplicity that the closed circuit THKT′K′H′ is in the same plain as the wire conductor UV, and look for the action caused by some element MM′ on this last. For this draw from the

mid-point A of this element line vectors to all the points of the circuit, and find the action perpendicular to UV caused by this element of the circuit.

The perpendicular component of UV of the action caused by $\mathtt{MM}' = \mathrm{d}s'$ on an element $\mathtt{KH} = \mathrm{d}s$ is obtained by multiplying the expression of this action by $\sin\theta'$; is therefore, observing that $1 - n - 2k = 0$,

$$ii'\,\mathrm{d}s'\sin\theta' r^k \frac{\mathrm{d}(r^k\cos\theta')}{\mathrm{d}s}\mathrm{d}s,$$

or

$$\frac{1}{2}ii'\,\mathrm{d}s'\tan\theta'\,\frac{\mathrm{d}(r^{2k}\cos^2\theta')}{\mathrm{d}s}\mathrm{d}s,$$

expression which should be integrated over the entire extent of the circuit. Integration by parts yields

$$\frac{1}{2}ii'\,\mathrm{d}s'\Big(r^{2k}\sin\theta'\cos\theta' - \int r^{2k}\mathrm{d}\theta'\Big).$$

The first term vanishes at the limits, there remains only

$$-\frac{1}{2}ii'\,\mathrm{d}s'\int r^{2k}\mathrm{d}\theta'.$$

Now consider the two elements KH, K′H′ made up of the same two consecutive rays, $\mathrm{d}\theta'$ is the same for both, but must be taken with the opposite sign, and then taking $\mathtt{AH} = r$, $\mathtt{AH}' = r'$, one has for joint action of the two elements

$$-\frac{1}{2}ii'\,\mathrm{d}s'\left[\int\left(r'^{2k} - r^{2k}\right)\mathrm{d}\theta'\right],$$

where we assume that r' is greater than r. The term in this integral which results from the convex, toward UV, part of THT′ dominates over that which is produced by the action of the concave part of TH′T′ if k is negative; the reverse will hold if k is positive, and there will be no action if k is zero. The same results hold for all the elements of UV, it follows that the part convex toward UV has more influence on the movement of the circuit than the concave part, if $k < 0$, as well as for $k = 0$, and less for $k > 0$. And, experiment shows this result. One then takes $k < 0$, and taking $n > 1$, it follows that $n = 1 - 2k$.

One deduces from this remarkable consequence that the parts of the same rectilinear current repel each other; if one has chosen $\theta = 0$, $\theta' = 0$, the formula which gives attraction of two elements becomes $\frac{kii'\,\mathrm{d}s\,\mathrm{d}s'}{r^n}$; and if it is negative, which it is, there is repulsion. This is what I verified by the experiment which I now describe. One takes a glass container PQ (Pl. 1 pg. 113, fig. 8 pg. 120) separated by the partition MN into two equal compartments filled with mercury, one places in a silk-covered copper wire ABCDE, with the branches AB, ED, situated parallel to the partition MN, floating on the mercury which communicates with the bare extremities A and E of these portions. By placing the rheophores in the capsules S and T, so that the mercury connects with that of the vase PQ by the portions hH and kK of the conductor, one establishes two currents, in which each one has as conductor one part of mercury and a solid part: whatever the direction of the current, one sees always the two wires AB, ED moving parallel to the partition MN and moving away from the points H and

K, which indicates a repulsion for each wire between the current established in the mercury and its extension in the wire itself. Depending on the direction of the current, the movement of the copper wire is more or less quick, because, in this case, the action of the earth on the portion BCD of the wire adds to the obtained effect, and in the other case, on the contrary, it decreases the obtained effect and should be subtracted from it.

5. General formulas which represent the action of a closed voltaic circuit or of a system of closed circuits on an electric current element

Examine now the action exerted by an electric current which forms a closed circuit, or a system of currents which also form closed circuits, on an element of electric current.

Take the coordinate origin at the location A′ (Pl. 1 pg. 113, fig. 9 pg. 120) of the considered element M′N′, and take λ, μ, ν, the angles which it makes with the three axes. Let MN be any element of the current in a closed circuit, where one of the currents forms equally closed circuits that compose the system of currents that one considers, naming $\mathrm{d}s'$ and $\mathrm{d}s$ the elements M′N′, MN, the distance AA′ of their centers and the angle of the current M′N′ with AA′, the formula that we previously found for expressing the mutual action of two elements becomes, by there replacing $\frac{\mathrm{d}r}{\mathrm{d}s'}$ by $-\cos\theta'$,

$$ii'\,\mathrm{d}s'\,r^k\,\frac{\mathrm{d}(r^n\cos\theta')\mathrm{d}s}{\mathrm{d}s}.$$

The angles which AA′ makes with the three axes have for cosines $\frac{x}{r}, \frac{y}{r}, \frac{z}{r}$, one has

$$\cos\theta' = \frac{x}{r}\cos\lambda + \frac{y}{r}\cos\mu + \frac{z}{r}\cos\nu;$$

by substituting this value for $\cos\theta'$, and multiplying by $\frac{x}{r}$, we find as the expression of the component following the x axis,

$$ii'\,\mathrm{d}s'\,r^{k-1}x\mathrm{d}\big(r^{k-1}x\cos\lambda + r^{k-1}y\cos\mu + r^{k-1}z\cos\nu\big),$$

the sign d refers only, except in the factor $\mathrm{d}s'$, to the differentials taken when varying only s, this expression can be written as

$$\begin{aligned}
&= ii'\,\mathrm{d}s'\Big[\cos\lambda r^{k-1}x\mathrm{d}\Big(r^{k-1}x\Big) + \frac{x\cos\mu}{y}y\mathrm{d}\Big(r^{k-1}y\Big) + \frac{x\cos\nu}{z}r^{k-1}z\mathrm{d}\Big(r^{k-1}z\Big)\Big]\\
&= \frac{1}{2}ii'\,\mathrm{d}s'\Big[\cos\lambda\mathrm{d}\Big(r^{2k-2}x^2\Big) + \frac{x}{y}\cos\mu\mathrm{d}\Big(r^{2k-2}y^2\Big) + \frac{x}{z}\cos\nu\mathrm{d}\Big(r^{2k-2}z^2\Big)\Big]\\
&= \frac{1}{2}ii'\,\mathrm{d}s'\left(\mathrm{d}\frac{x^2\cos\lambda + xy\cos\mu + xz\cos\nu}{r^{n+1}} - \frac{y^2\cos\mu}{r^{n+1}}\mathrm{d}\frac{x}{y} - \frac{z^2\cos\nu}{r^{n+1}}\mathrm{d}\frac{x}{y}\right)\\
&= \frac{1}{2}ii'\,\mathrm{d}s'\left(\mathrm{d}\frac{x\cos\theta'}{r^n} + \frac{x\mathrm{d}y - y\mathrm{d}x}{r^{n+1}}\cos\mu - \frac{z\mathrm{d}x - x\mathrm{d}z}{r^{n+1}}\cos\nu\right),
\end{aligned}$$

by replacing $2k-2$ by its value $-n-1$.

If one represents by r_1, x_1, θ'_1, and r_2, x_2, θ'_2, the values of r, x, θ', at the two extremities of the arc s, and by X resultant following the x axis of all the forces exerted by the elements of this arc on $\mathrm{d}s'$, one obtains

$$\mathrm{X} = \frac{1}{2}ii'\mathrm{d}s'\left(\mathrm{d}\frac{x_2\cos\theta'_2}{r_2^n} - \mathrm{d}\frac{x_1\cos\theta'_1}{r_1^n} + \cos\mu\int\frac{x\mathrm{d}y - y\mathrm{d}x}{r^n+1} - \cos\nu\int\frac{z\mathrm{d}x - x\mathrm{d}z}{r^n+1}\right).$$

If this arc forms a closed circuit r_2, x_2, θ'_2, will be equal to r_1, x_1, θ'_1, and the value of $\mathtt{X}$ reduces to

$$\mathtt{X} = \frac{1}{2} ii' \,\mathrm{d}s' \left(\cos\mu \int \frac{x\mathrm{d}y - y\mathrm{d}x}{r^{n+1}} - \cos\nu \int \frac{z\mathrm{d}x - x\mathrm{d}z}{r^{n+1}} \right).$$

by designating by $\mathtt{Y}$ and $\mathtt{Z}$ the forces following the y and of z axes resultant of the action of the same elements on $\mathrm{d}s'$, one finds by a similar calculation

$$\mathtt{Y} = \frac{1}{2} ii' \,\mathrm{d}s' \left(\cos\nu \int \frac{y\mathrm{d}z - z\mathrm{d}y}{r^{n+1}} - \cos\lambda \int \frac{x\mathrm{d}y - y\mathrm{d}x}{r^{n+1}} \right),$$

$$\mathtt{Z} = \frac{1}{2} ii' \,\mathrm{d}s' \left(\cos\lambda \int \frac{z\mathrm{d}x - x\mathrm{d}z}{r^{n+1}} - \cos\mu \int \frac{y\mathrm{d}z - z\mathrm{d}y}{r^{n+1}} \right),$$

and by taking

$$\int \frac{y\mathrm{d}z - z\mathrm{d}y}{r^{n+1}} = \mathtt{A}, \quad \int \frac{z\mathrm{d}x - x\mathrm{d}z}{r^{n+1}} = \mathtt{B}, \quad \int \frac{x\mathrm{d}y - y\mathrm{d}x}{r^{n+1}} = \mathtt{C},$$

it becomes

$$\mathtt{X} = \frac{1}{2} ii' \,\mathrm{d}s' (\mathtt{C}\cos\mu - \mathtt{B}\cos\nu),$$
$$\mathtt{Y} = \frac{1}{2} ii' \,\mathrm{d}s' (\mathtt{A}\cos\nu - \mathtt{C}\cos\lambda),$$
$$\mathtt{Z} = \frac{1}{2} ii' \,\mathrm{d}s' (\mathtt{B}\cos\lambda - \mathtt{A}\cos\mu).$$

By multiplying the first of these equations by $\mathtt{A}$, the second by $\mathtt{B}$ and the third by $\mathtt{C}$, one finds $\mathtt{AX} + \mathtt{BY} + \mathtt{CZ} = \mathtt{0}$; and if one conceives at the origin a line $\mathtt{A'E}$ which makes with the axes whose cosines are respectively

$$\frac{\mathtt{A}}{\mathtt{B}} = \cos\xi_1, \quad \frac{\mathtt{B}}{\mathtt{D}} = \cos\eta_1, \quad \frac{\mathtt{C}}{\mathtt{D}} = \cos\zeta_1,$$

by supposing, for bevity,

$$\sqrt{\mathtt{A}^2 + \mathtt{B}^2 + \mathtt{C}^2} = \mathtt{D},$$

they will be perpendicular on the resultant $\mathtt{R}$ of the three forces $\mathtt{X}, \mathtt{Y}, \mathtt{Z}$, which make with the axes angles whose cosines are

$$\frac{\mathtt{X}}{\mathtt{R}}, \quad \frac{\mathtt{Y}}{\mathtt{R}}, \quad \frac{\mathtt{Z}}{\mathtt{R}},$$

since one has, by virtue of the preceding equation,

$$\frac{\mathtt{A}}{\mathtt{D}} \cdot \frac{\mathtt{X}}{\mathtt{R}} + \frac{\mathtt{B}}{\mathtt{D}} \cdot \frac{\mathtt{Y}}{\mathtt{X}} + \frac{\mathtt{C}}{\mathtt{D}} \cdot \frac{\mathtt{Z}}{\mathtt{R}} = 0.$$

It should be remarked that the law which we have determined is completely independent of the direction of the element $\mathtt{M'N'}$; because it is an immediate deduction from the integrals $\mathtt{A}, \mathtt{B}, \mathtt{C}$ which depend only on the closed circuit and of the position of the coordinates of the plane, and which are the sums of the projections on the coordinate plane of the area of the triangles which have their top at the center of the element $\mathrm{d}s'$, and as bases the various elements of the closed circuit s, all of its areas being divided by the power $n + 1$ of the

vector ray r. The resultant is perpendicular on this line $\mathtt{A'E}$ which I named directrix(1), it is, regardless of the direction of the element, in the plane raised at the point $\mathtt{A'}$ perpendicular to $\mathtt{A'E}$; I gave this plane the name directing plane. If one forms the sum of squares of $\mathtt{X}, \mathtt{Y}, \mathtt{Z}$, on finds as the value of the result of the action of the unique circuit of the ensemble of circuits which one has considered,

$$\mathtt{R} = \frac{1}{2}\mathtt{D}\, ii'\, \mathrm{d}s' \sqrt{(\cos\zeta_1 \cos\mu - \cos\eta_1 \cos\nu)^2 + (\cos\xi_1 \cos\nu - \cos\zeta_1 \cos\lambda)^2 \over +(\cos\eta_1 \cos\lambda - \cos\xi_1 \cos\mu)^2}$$

or, by naming ϵ the angle of the element $\mathrm{d}s'$ with the directrix

$$\mathtt{R} = \frac{1}{2}\mathtt{D}\, ii'\, \mathrm{d}s' \sin\epsilon.$$

It is easy to determine the component of this action in a given plane through the element $\mathrm{d}s'$ and making an angle φ with the plane formed by $\mathrm{d}s'$ and the directrix. In effect, the resultant $\mathtt{R}$ being perpendicular to this last plane, its component on the given plane will be

$$\mathtt{R} \sin\varphi, \quad \mathtt{ou} \quad \frac{1}{2}\mathtt{D} ii'\, \mathrm{d}s' \sin\epsilon \sin\varphi.$$

Now, $\sin\epsilon \sin\varphi$ is equal to the sin of the angle ψ which the directrix makes with the given plane. The component in the plane will therefore have as its expression

$$\frac{1}{2}\mathtt{D} ii'\, \mathrm{d}s' \sin\psi.$$

This expression can be put in another form by observing that ψ is the complement of the angle which the directrix makes with the normal to the plane in which one considers the action. One has therefore, by naming ξ, η, ζ the angles that this last striaght line forms with the three axes,

$$\sin\psi = \frac{\mathtt{A}}{\mathtt{D}}\cos\xi + \frac{\mathtt{B}}{\mathtt{D}}\cos\eta + \frac{\mathtt{C}}{\mathtt{D}}\cos\zeta,$$

and the expression of the action becomes

$$\frac{1}{2} ii'\, \mathrm{d}s' \big(\mathtt{A}\cos\xi + \mathtt{B}\cos\eta + \mathtt{C}\cos\zeta\big),$$

or

$$\frac{1}{2}\mathtt{U} ii'\, \mathrm{d}s',$$

by using

$$\mathtt{U} = \mathtt{A}\cos\xi + \mathtt{B}\cos\eta + \mathtt{C}\cos\zeta.$$

One sees that this action is independent of the direction of the element in the plane that one has considered, we designate that under the name of the action exerted in this plane, and we conclude that that which remains the same when one gives successively to the element various directions in the same plane, when it is such that the Earth exerts on

(1) Note by MDG: That is to say *magnetic induction.*

a movable conductor in a fixed plane is produced by electric currents from closed circuits, and thus the distances to the conductor are sufficiently large to be considered as constants during the time that it moves in the plane, it will always have the same value in the various positions which the conductor successively takes, because the actions exerted on each of the elements of which it is composed always rest the same and always perpendicular to these elements, their resultant can not vary in its size nor in its direction relative to the conductor. This direction will also change in the fixed plane by there following the movement of this conductor : it is in effect that which one observes with respect to the conductor which is mobile in the horizontal plane, and which one directs successively in various azimuths.

6. Experiments by which one verifies a consequence of the formulas

One can verify this result by the following experiment : within a wooden disk ABCD (Pl. 1 pg. 113, fig. 10 pg. 120), one carves a circular channel KLMN in which one places two copper vessels KL, MN of the same form, and which each occupy nearly the half-circumference of the channel in a manner such that there are between them two cuttings KN, LM which one fills with an insulating putty; on each of these vessels are two copper plates PQ, RS, embedded in the disk and which have cups X, Y, designed to allow, through the mercury which they contain, the vessels KL, MN, in communication with the rheophores of a very strong battery; in the disk there is embedded another plate TO carrying the cutting Z, where one also places a small amount of mercury; this plate TO, is soldered at the center O of the disk to a vertical rod to which is soldered to a fourth plate U, which has its bottom covered by a piece of glass or agate to make more mobile the bracket which we will discuss, but whose edges are sufficiently high so as to be in communication with the mercury which one places in this cutting; it receives the tip V (Pl. 1 pg. 113, fig. 11 pg. 121) which forms the pivot of the bracket FGHI, whose branches EG, EI are mutually equal and soldered from G and I to the plates gxh, iyf which are submerged in the acidic water of the cutting U, and which are attached by their other extremities h, f by arms EH, EF, without communicating with them. These two plates are equal and similar and folded in an approximately 90° arc. When one inserts the rheophores, one in the cup Z, the other in one of the two cups X or Y, the current only passes through one of the arms of the bracket, and one sees this one turn on the point V due to the earth's action, from East to West by the middle when the current goes from the circumference to the center, and in the opposite direction when it goes from the center to the circumference, conforming to the explanation of this phenomenon that I have given, and which one can see in my Recueil d'Observations électro-dynamiques, page 284. But when one inserts them in the two cups X and Y, the current flows in the opposite direction through the two arms EG, EI, the bracket remains stationary at the location where it was placed, when, for example, one of these arms is parallel and the other perpendicular to the magnetic meridian, and this one at the same time in pushing lightly on the disk ABCD, one increases, by the small vibrations which result, the mobility of the instrument. By slightly bending the arms of the bracket around the point E, one can make them take different angles, and the result of the experiment is always the same. It follows inevitably that the force with which the earth acts on a portion of a conductor, perpendicular to its direction, to move in a horizontal plane, and, by consequence, in a plane given a position with respect to the system of terrestrial currents, is the same, that would be the direction, in this plane, of the portion of the conductor, which is precisely the result of the calculation it was meant to verify.

It is good to remark that the action of acidic water currents on their extensions on the plates gh, if does not disturb in any manner the equilibrium of the device; since it is easy to see that the action which is in question tends to cause the plate gh to turn about the point V in the direction hxg, and the plate if in the fyi direction, from which the result, due to the equality of these plates, the two rotational moments cancel since they are equal and with opposite signs.

One knows that it is M. Savary who is responsible for the experiment by which one found this action; this experiment can be made easier by replacing the copper wire spiral in the device, which was first used, by a circular plate of the same metal. This plate ABC (Pl. 1 pg. 113, fig. 12 pg. 121) forms a circular arc nearly equal to a complete circumference; but its extremities A and C are separated from each other by a piece D of insulating material. One makes one of these extremities A, for example, in communication with one of the rheophores at the point O which one places in the cup S (Pl. 1 pg. 113, fig. 13 pg. 121) filled with mercury; this is joined by the metallic wire STR to the cup R in which one of the rheophores is immersed. This point connects with the extremity A by the copper wire AEQ whose extension QF supports by F the plate ABC by a strip of insulating material, which covers the copper wire at this point. Since the point O rests on the base of the cup the plate ABC (Pl. 1 pg. 113, fig. 12 pg. 121) is immersed in the acidic water contained in the copper vessel MN (Pl. 1 pg. 113, fig. 13 pg. 121) which communicates with the cup P which contains the other rheophore; one sees therefore turning of this plate in the direction CBA, and provided that the battery is strong enough, the movement continues in this direction until one reverses the communications with the battery, by reciprocally changing the two rheophores of the cup P with the cup R, thus proving that this movement is not at all due to the action of the earth and can only derive from the acidic water currents exerting on the circular plate current ABC (Pl. 1 pg. 113, fig. 12 pg. 121), an action which is always repulsive, because if GH represents one of the acidic water currents which extends to HK in the plate ABC, regardless of the direction of this current, it will obviously travel one of the sides of the angle GHK while approaching, and the other while flowing away from the top H. But it is necessary, so that the movement which one observes in this case to take place, that the repulsion between two elements, one in I and the other in L, take place following the line IL, oblique to the arc ABC, and not following the perpendicular LT at the element situated in L, since the direction of this perpendicular encounters the vertical drawn through the point O around which the mobile part of the device is allowed to turn, a force directed along this perpendicular cannot impart any rotational movement.

I have just said that, when one wants to be assured that the movement of this device is not produced by the action of the earth, by establishing that it continues to happen in the same direction when one reverses the connections to the battery by changing the rheophore cups, it is necessary to use a battery of sufficient strength; it is effectively impossible, in this arrangement of a mobile conductor, to avoid the earth's action on the vertical wire AE moving it to the west, when the current there is ascending, to the east when the current is descending, and on the horizontal wire EQ, in order to make it turn about the vertical passing through the point O, in the sense directly east, south, west, when the current goes from E to Q, while approaching the rotational center, and in a retrograde western, southern, eastern direction, when it goes from Q to E, while following the same center(1). The first of these actions is hardly observable, at least when one gives to the vertical wire AE a

(1) Note for these two kinds of actions acting by the earth, what is said in my recueil d'Observations électro-dynamiques, pages 280, 284.

length only sufficient for the stability of the mobile conductor at its point O; but the second is determined by the dimensions of the device; and since it changes direction when one reverses the connections with the battery, it is added in the order of the connections with the action exerted by the acidic water currents, and it reduces in the other; this is why the observed movement is always more rapid in one case than in the other; this difference is more pronounced when the current produced by the battery is weaker because the measure of its intensity diminished, the electro-dynamic action being, all other things being equal, as the product of the intensities of the two portions of the currents which act one on the other, this action between the acidic water currents and those of the plate ABC, decrease as the square of their intensity, while the intensity of the terrestrial currents remain the same, their action, on those of the plate, will not be less than proportional to the same intensity : as the measure of the battery's intensity diminishes, the action of the earth becomes more and more able to destroy that of the acidic water currents in the arrangement of the connections with the battery where these actions are opposed, and one sees, when this energy becomes very weak, the device will stop in this case, and the movement then appears in the contrary direction; thus the experiment leads to a conclusion opposite to that which was expected to be established, since the action of the earth became dominant one can ignore the existence of those from the acidic water currents. For the rest, the first of these two actions is always null on the circular plate ABC, because the earth as like a system of closed currents, the force that they exert on each element being perpendicular to the direction of this element, passes through the vertical set by the point O, and cannot, as a consequence, tend to cause rotation of the mobile conductor the vertical.

7. Application of the preceding formulas to a circular circuit

We will, to serve as an example, apply the preceding formulas to the case where the system reduces to a single closed circular current.

Since the system is only composed of a single current, traversing a circular circumference of any radius m, one simplifies the calculation, by taking, for the plane of the xy, the plane through the coordinate origin, that is to say through the center of A of the element ab (Pl. 1 pg. 113, fig. 14 pg. 122), parallel to that of the circle; and for the plane of the xz, the one that goes perpendicularly through the plane of the circle by the same origin and by the center O.

For p and q the coordinates of this center O; suppose that the point C is the projection of O on the plane of xy, N that of any point of the circle M, and name the angle ACN; if one projects NP perpendicularly on AX, the three coordinates x, y, z of the point M will be MN, NP, AP, and one easily finds for their values :

$$z = q, \quad y = m \sin \omega, \quad x = p - m \cos \omega.$$

The quantities that we have designated by A, B, C, are respectively equal to

$$\int \frac{y\mathrm{d}z - z\mathrm{d}y}{r^{n+1}}, \quad \int \frac{z\mathrm{d}x - x\mathrm{d}z}{r^{n+1}}, \quad \int \frac{x\mathrm{d}y - y\mathrm{d}x}{r^{n+1}},$$

we have

$$\mathtt{A} = -mq \int \frac{\cos\omega \mathrm{d}\omega}{r^{n+1}},$$
$$\mathtt{B} = -mq \int \frac{\sin\omega \mathrm{d}\omega}{r^{n+1}},$$
$$\mathtt{C} = -mp \int \frac{\cos\omega \mathrm{d}\omega}{r^{n+1}} - m^2 \int \frac{\mathrm{d}\omega}{r^{n+1}},$$

If one integrates by parts those of these terms which contain $\sin\omega$ and $\cos\omega$, while paying attention that

$$r^2 = x^2 + y^2 + z^2 = q^2 + p^2 + m^2 - 2mp\cos\omega$$

gives

$$\mathrm{d}r = \frac{mp\sin\omega \mathrm{d}\omega}{r},$$

if one removes the terms which are null because their integrals are taken from $\omega = 0$ to $\omega = 2\pi$, and one sets the values of $\mathtt{A}, \mathtt{B}, \mathtt{C}$ also found in that of $\mathtt{U}$,

$$\mathtt{U} = \mathtt{A}\cos\xi + \mathtt{B}\cos\eta + \mathtt{C}\cos\zeta,$$

one obtains

$$\mathtt{U} = m\left[(n+1)(p^2\cos\zeta - pq\cos\xi)\int \frac{\sin^2\omega \mathrm{d}\omega}{r^{n+3}} - \cos\zeta \int \frac{\mathrm{d}\omega}{r^{n+1}}\right].$$

But, the angle ξ can be expressed by the mean of ζ; since, by designating by h, the perpendicular $\mathtt{OK}$ projected onto the center $\mathtt{O}$ on the plane $b\,\mathtt{AG}$ for which one calculates the value of $\mathtt{U}$, one obtains $h = q\cos\zeta + p\cos\xi$, and this value becomes

$$\mathtt{U} = m^2\Big\{(n+1)\big[(p^2+q^2)\cos\zeta - hq\big]\int \frac{\sin^2\omega \mathrm{d}\omega}{r^{n+3}} - \cos\zeta\int \frac{\mathrm{d}\omega}{r^{n+1}}\Big\}.$$

8. Simplification of the formulas when the diameter of the circular circuit is very small

The evaluation is quite simple in the case where the radius m is very small when compared to the distance l of the origin $\mathtt{A}$ to the center $\mathtt{O}$; since, if one develops in series following the powers of m, one has that when one neglects the powers of m higher than 3, the terms in m^3 disappear between the limits $[0, 2\pi]$, and those that are in m^2 obtain by replacing r by $l = \sqrt{p^2+q^2}$; it only remains therefore to calculate the values of

$$\int \sin^2\omega \mathrm{d}\omega \quad \text{and of} \quad \int \mathrm{d}\omega \ \text{ from } \omega = 0 \ \text{ to } \omega = 2\pi\,;$$

which gives π for the first, and 2π for the second; the value of $\mathtt{U}$ therefore reduces to

$$\mathtt{U} = \pi m^2\left[\frac{(n-1)\cos\zeta}{l^{n+1}} - \frac{(n+1)hq}{l^{n+3}}\right].$$

9. Application to a planar circuit which forms a closed surface of arbitray shape, at first in the case where the dimensions are all very small, and then when they are of any size whatsoever

For increased generality, we will now assume that the closed current, instead of being circular, has any form, but still remains plane and very small.

For MNL (Pl. 1 pg. 113, fig. 15 pg. 122) a very small closed and plane circuit of which the area is λ and which acts on an element placed at the origin A. Partition its surface into infinitely small elements, by planes passing by the z axes, and where APQ the trace of one of these planes, and M, N its meeting points with the circuit λ, projected on the xy plane in P and Q. Extend the chord MN to the z axis in G; drop from A a perpendicular $\mathtt{AE} = q$ on the plane of the circuit, and join EG. For Apq the trace of a plane infinitely close to the first, make with it an angle $\mathrm{d}\varphi$; make $\mathtt{AP} = u$ and $\mathtt{PQ} = \delta u$. The action of the circuit on the element in A depends, as we have seen, on three integrals designated by A, B, C, which we will calculate. Consider first C, whose value is

$$\mathtt{C} = \int \frac{x\mathrm{d}y - y\mathrm{d}x}{r^{n+1}} = \int \frac{u^2\mathrm{d}\varphi}{r^{n=1}}.$$

This integral is relative to all the points of the circuit, ans if one considers simultaneously the two elements including between the two adjoining planes AGNQ and AGnq, and those that relate to these equal values and the opposite signs of $\mathrm{d}\varphi$, one will see that the actions of these two elements should be removed one and the other, and that the one of the elements which is the closest to A produces the stronger action. Observing that to have the action from farther, it is necessary to replace u and r by $u + \delta u$ and $r + \delta r$, one finds

$$\mathtt{C} = \int \frac{u^2\mathrm{d}\varphi}{r^{n+1}} - \int \frac{(u + \delta u)^2\mathrm{d}\varphi}{(r + \delta r)^{n+1}},$$

these two integrals are taken between the two values of φ relative to the extreme points L, L′ between which the circuit is composed.

The difference between these two integrals can be considered as the variation of the first take with the sign reversed, if one neglects all the powers of the circuit dimensions whose exponents are greater than unity, it becomes

$$\mathtt{C} = -\delta \int \frac{u^2\mathrm{d}\varphi}{r^{n+1}} = \int \left[\frac{(n+1)u^2\,\delta r}{r^{n+1}} - \frac{2u\mathrm{d}u}{r^{m+1}}\right]\mathrm{d}\varphi.$$

Now

$$r^2 = u^2 + z^2,$$

where

$$\delta r = \frac{u\,\delta u + z\,\delta z}{r};$$

also the angle ZAE being equal to ζ, one has

$$\mathtt{AG} = \frac{q}{\cos\zeta}, \quad \mathtt{GH} = z - \frac{q}{\cos\zeta},$$

and, due to the similar triangles $\mathtt{MHG}, \mathtt{MSN}$,

$$\mathtt{MH} : \mathtt{MS} :: \mathtt{GH} : \mathtt{NS},$$

that is to say

$$u : \delta u :: z - \frac{q}{\cos\zeta} : \delta z ;$$

by extracting from this proportion the value of δz and carry it into that of δr, one obtains

$$\delta z = \frac{z\cos\zeta - q}{u\cos\zeta}\,\delta u, \quad \delta r = \frac{(u^2+z^2)\cos\zeta - qz}{ur\cos\zeta}, \quad \delta u = \frac{r^2\cos\zeta - qz}{ur\cos\zeta}\,\delta u,$$

and by substituting that value into $\mathtt{C}$, it becomes

$$\begin{aligned}\mathtt{C} &= \int \left[\frac{(n+1)(r^2\cos\xi - qz)}{r^{n=3}\cos\zeta} - \frac{2}{r^{n+1}}\right] u\,\delta u \mathrm{d}\varphi \\ &= \int \left[\frac{(n-1)}{r^{n+1}} - \frac{(n+1)qz}{r^{n+3}\cos\zeta}\right] u\,\delta u \mathrm{d}\varphi.\end{aligned}$$

Since the circuit is very small, one can consider the values of r and of z as constants and equal for example to those that occur at the center of gravity of the area of the circuit, in order that the third order terms vanish, representing these values by l and z_1 the preceding integral takes this form

$$\mathtt{C} = \left[\frac{(n-1)}{l^{n+1}} - \frac{(n+1)qz_1}{l^{n+3}\cos\zeta}\right] \int u\mathrm{d}\varphi\,\delta u.$$

But $u\,\delta\varphi$ is the arc $\mathtt{PK}$ given by $\mathtt{A}$ as center with the radius u and $\mathtt{PQ} = \delta u$; therefore $u\mathrm{d}\varphi\,\delta u$ is the infinitely small area $\mathtt{PQ}\,qp$, and the integral $\int u\mathrm{d}\varphi\mathrm{d}u$ gives the total area of the projection of the circuit, so to say $\lambda\cos\zeta$, since ζ is the angle of the plane of the circuit with the plane of xy; one obtains therefore finally

$$\mathtt{C} = \left[\frac{(n-1)\cos\zeta}{l^{n+1}} - \frac{(n+1)qz_1}{l^{n+3}}\right]\lambda.$$

One obtains analogous values for $\mathtt{B}$ and $\mathtt{A}$, namely:

$$\mathtt{B} = \left[\frac{(n-1)\cos\eta}{l^{n+1}} - \frac{(n+1)qy_1}{l^{n+3}}\right]\lambda.$$

$$\mathtt{A} = \left[\frac{(n-1)\cos\xi}{l^{n+1}} - \frac{(n+1)qx_1}{l^{n+3}}\right]\lambda.$$

One knows thus the angles that the directrix makes with the axes, since one has for their cosines $\frac{\mathtt{A}}{\mathtt{D}}, \frac{\mathtt{B}}{\mathtt{D}}, \frac{\mathtt{C}}{\mathtt{B}}$, by

$$\mathtt{D} = \sqrt{\mathtt{A}^2 + \mathtt{B}^2 + \mathtt{C}^2}.$$

As for the force produced by the action of the circuit on the element situated at the origin, it will have, as one saw above, the expression; $\frac{1}{2}ii'\mathrm{d}s'\mathtt{D}\sin\epsilon$, ϵ being the angle which this

element makes with the directrix, at which this force is perpendicular as is the direction of the element.

In the case where the small circuit that is considered is in the same plane as the element $\mathrm{d}s'$ on which it acts, one has, by taking this plane as the one for the xy,

$$q = 0, \quad \cos\zeta = 1, \quad \cos\eta = 0, \quad \cos\xi = 0,$$

and as follows

$$\mathtt{A} = 0, \ \mathtt{B} = 0, \ \mathtt{C} = \frac{n-1}{l^{n+1}}\lambda;$$

$\mathtt{D}$ reduces thus to $\mathtt{C}$; ϵ is equal to $\frac{\pi}{2}$, and the action of the circuit on the element $\mathrm{d}s$ becomes

$$\frac{n-1}{2}\frac{ii'\mathrm{d}s'\lambda}{l^{n+1}}.$$

I will now present a new manner of considering the action of planar circuits of any form and size.

Consider any planar circuit $\mathtt{MN}m$ (Pl. 1 pg. 113, fig. 16 pg. 123); partition its surface into infinitely small elements by parallel lines cut by a second system of parallels making right angles with the first ones, and imagine around each of these infinitely small areas of currents directed in the same direction as the current $\mathtt{MN}m$. All the parts of these currents which, are found following these straight lines, will be canceled, because there will be two contrary signs which follow the same line; and there only remain the curved parts of these currents, such as $\mathtt{MM}', mm'$, which form the complete circuit $\mathtt{MN}m$.

It follows from what the three integrals $\mathtt{A},\mathtt{B},\mathtt{C}$ obtain for the plain finite size circuit, by substituting in the values which we obtained for these three quantities, in place of λ any element of the area of the circuit that we can represent by $\mathrm{d}^2\lambda$ and integrate in all the extent of this area.

When, for example, the element is situated in the same plane as the circuit, and on takes this plane as that of the xy, one has

$$\mathtt{A} = 0, \ \mathtt{B} = 0, \ \mathtt{C} = (n-1)\int\int\frac{\mathtt{d}^2\lambda}{l^{n+1}};$$

and the value of the force becomes

$$\frac{n-1}{2}ii'\mathrm{d}s'\int\int\frac{\mathtt{d}^2\lambda}{l^{n+1}};$$

from which it follows that, if at each of the points of the area of the circuit one raises a perpendicular equal to $\frac{1}{l^{n+1}}$, the volume of the prism which has as its base the circuit and which is terminated on the surface formed by the extremities of these perpendiculars, will represent the value of $\int\int\frac{\mathrm{d}^2\lambda}{l^{n+1}}$; and this volume multiplied by $\frac{n-1}{2}ii'\mathrm{d}s'$ expresses the sought for action.

It is useful to observe that the question was directed to the cubature of a solid, one could adopt the system of coordinates, and the division of the area of the circuit into elements which will lead to even simpler calculations.

10. Mutual interaction of two closed circuits located in the same plane, first assuming that all the dimensions are very small, and then in the case where the two circuits are of any form and size whatsoever

Proceeding to the mutual action of two very small circuits O or O′ (Pl. 2 pg. 114, fig. 18 pg. 123) situated in the same plane. For MN an arbitrary element $\mathrm{d}s'$ of the second. The action of the circuit O on $\mathrm{d}s'$ is, after the preceding,

$$\frac{n-1}{2}\cdot\frac{ii'\,\mathrm{d}s'\lambda\,\mathrm{d}\varphi}{r^{n+1}}.$$

Call $\mathrm{d}\varphi$ the angle MNO, and writing the arc MP between the sides of this angle, one can replace the small current MN by the two currents MP, NP of which the lengths are respectively $r\,\mathrm{d}\varphi$ and $\mathrm{d}r$; the action of the circuit O on the element MP, which is normal to its direction, is obtained by replacing in the preceding expression $\mathrm{d}s'$ by MP, and becomes

$$\frac{n-1}{2}\cdot\frac{ii'\lambda\,\mathrm{d}\varphi}{r^{n}};$$

the action on NP, perpendicular to its direction, becomes similarly

$$\frac{n-1}{2}\cdot\frac{ii'\lambda\,\mathrm{d}r}{r^{n+1}}.$$

This last integrated over the entire closed circuit O′ is null, it suffices to consider the first which is directed toward the point O, where it already results that the action of these two small circuits is directed following the line which joins them.

Extend the rays OM, ON until they encounter the curve in M′ and N′; the action of M′N′ should be cut off from that of MN, and the resulting action is obtained by taking as before the variation of that of MN with the sign reversed, this gives

$$\frac{n(n-1)}{2}\cdot\frac{ii'\lambda\,\mathrm{d}\varphi\;\delta r}{r^{n+1}}\quad\text{ou}\quad\frac{n(n-1)}{2}\cdot\frac{ii'\lambda r\,\mathrm{d}\varphi\;\delta r}{r^{n+2}}.$$

Where, $r\,\mathrm{d}\varphi\,\delta r$ is the measure of the infinitely small segment MNN′M′. Taking the sum of all the analogous expressions relative to different elements of the circuit O′, and considering r as constant and equal to the distance between the centers of gravity of the areas λ and λ' of the two circuits, one obtains for the action which one exerts on the other

$$\frac{n-1}{2}\cdot\frac{ii'\,\mathrm{d}s'\lambda\lambda'}{r^{n+2}},$$

and this action will be directed following the line OO′. It results that the mutual action of two finite circuits situated in the same plane is obtained by considering their areas as partitioned into elements, infinitely small in all respects, and supposing that these elements act on one another following the line that joins them, by direct reason of their surfaces and by reason inverse of the power $n+2$ of their distance.

As the mutual action of closed currents therefore is a function only of the distance, one draws this important consequence, that there can never result from this action a continuing rotational motion.

11. Determination of the two unknown constants which enter into the fundamental formula

The formula which we just found for obtaining the mutual action of two closed and planar circuits based on the actions of the elements of the areas of these circuits, leads to the determination of the value of n. In effect, if one considers two similar systems composed of two closed and planar circuits, the similar elements of their areas will be proportional to the square of the counterpart lines, and the distances of these elements will be proportional to the first powers of the same lines. Calling m the ratio of homologous lines of the two systems, the actions of two elements of the first system and their correspondents in the second will be respectively

$$\frac{n(n-1)}{2} \cdot \frac{ii'\lambda\lambda'}{r^{n+2}} \quad \text{and} \quad \frac{n(n-1)}{2} \cdot \frac{ii'\lambda\lambda' m^4}{r^{n+2} m^{n+2}};$$

their ratio, and hence that of the total action, will thus be m^{2-n}. However, we have described previously an experiment by which one can prove directly that these two actions are equal; it is necessary that $n = 2$, and, due to the equation $1 - n - 2k = 0$, that $k = -\frac{1}{2}$. These values of n and of k reduce to a very simple form the expression

$$-\frac{1+k}{ii'} r^{1-n-k} \frac{\mathrm{d}^2(r^{1+k})}{\mathrm{d}s\mathrm{d}s'}$$

of the mutual action of $\mathrm{d}s$ and of rds'; this expression becomes

$$-\frac{2ii'}{\sqrt{r}} \cdot \frac{\mathrm{d}^2\sqrt{r}}{\mathrm{d}s\,\mathrm{d}s'} \mathrm{d}s\,\mathrm{d}s'.$$

It also follows from $n = 2$ that, in the case where the directions of the two elements stay the same, this action is due to the inverse square of their distance. One knows that M. de La Place established the same law, based on an experiment of M. Biot, in the case of the mutual action of an element of a voltaic conductor and of a magnetic molecule : but this result cannot be extended to the action of two conducting elements, assuming that the action of the magnets is due to electric currents; while the experimental demonstration that I just gave is independent of all the hypotheses that one could make about the constitution of the magnets.

12. Action of a conducting wire which forms a segment of a circle on a rectilinear conductor passing through the center of the segment

Whether MON (Pl. 2 pg. 114, fig. 17 pg. 123) a circuit forming a sector whose sides comprise an infinitely small angle, and look for the action that it exerts on a rectilinear conductor OS′ passing through the center O of the sector, and calculate first that of an element MNQP of the area of the sector on an element M′N′ of the conductor OS′. Make OM $= u$, MP $= \mathrm{d}u$, OM′ $= s'$, MM′ $= r$, S′ON $= \epsilon$, NOM $= \mathrm{d}\epsilon$. The moment of MNQP in order to cause M′ to turn about O will, by observing that the area MNQP has as expression $u\,\mathrm{d}u\mathrm{d}\epsilon$,

$$\frac{1}{2} ii'\, s'\, \mathrm{d}s' \frac{u\mathrm{d}u\mathrm{d}\epsilon}{r^3},$$

and the moment of the sector on the conductor s' will be obtained by integrating this expression with respect to u and s'. One has

$$r^2 = s'^2 + u^2 - 2us'\cos\epsilon,$$

from which

$$r\frac{\mathrm{d}r}{\mathrm{d}u} = u - s'\cos\epsilon, \quad r\frac{\mathrm{d}r}{\mathrm{d}s'} = s' - u\cos\epsilon,$$

and, by differentiating a second time,

$$r\frac{\mathrm{d}^2 r}{\mathrm{d}u\mathrm{d}s'} + \frac{\mathrm{d}r}{\mathrm{d}s'}\cdot\frac{\mathrm{d}r}{\mathrm{d}u} = -\cos\epsilon,$$

or, by substituting for $\frac{\mathrm{d}r}{\mathrm{d}s'}$ and $\frac{\mathrm{d}r}{\mathrm{d}u}$ their values,

$$r\frac{\mathrm{d}^2 r}{\mathrm{d}u\mathrm{d}s'} + \frac{(u - s'\cos\epsilon)(s' - u\cos\epsilon)}{r^2} = -\cos\epsilon,$$

which becomes, by carrying out the calculation and reducing,

$$r\frac{\mathrm{d}^2 r}{\mathrm{d}u\,\mathrm{d}s'} + \frac{us'\sin^2\epsilon}{r^2} = 0,$$

from which one extracts

$$\frac{us'}{r^3} = -\frac{1}{\sin^2\epsilon}\cdot\frac{\mathrm{d}^2 r}{\mathrm{d}u\mathrm{d}s'};$$

substituting this value in the elementary moment, one has for the expression of the total moment

$$\frac{1}{2}ii'\mathrm{d}\epsilon\int\int\frac{us'\mathrm{d}u\mathrm{d}s'}{r^3} = \frac{1}{2}ii'\frac{\mathrm{d}\epsilon}{\sin^2\epsilon}\int\int\frac{\mathrm{d}^2 r}{\mathrm{d}u\mathrm{d}s'}\mathrm{d}u\mathrm{d}s'.$$

By considering the portion $\mathtt{L}'\mathtt{L}''$ of the current s', and the portion $\mathtt{L}_1, \mathtt{L}_2$ of the sector, and by making $\mathtt{L}'\mathtt{L}_1 = r'_1, \mathtt{L}''\mathtt{L}_1, = r''_1, \mathtt{L}'\mathtt{L}_2 = r'_2, \mathtt{L}''\mathtt{L}_2 = r''_2$, the value of this integral is evidently

$$\frac{1}{2}ii'\frac{\mathrm{d}\epsilon}{\sin^2\epsilon}(r'_2 + r''_1 - r''_2 - r'_1).$$

Where it is from the center $\mathtt{O}$ that the sector starts and the conductor s', the distance $r'_1 = 0$; and if one makes $\mathtt{O}\mathtt{L}_2 = a$, $\mathtt{O}\mathtt{L}'' = b$, $\mathtt{L}''\mathtt{L}_2 = r$, on finds that their mutual action is expressed by

$$\frac{1}{2}ii'\frac{\mathrm{d}s}{\sin^2\epsilon}(a + b - r).$$

When the conductor $\mathtt{L}'\mathtt{L}''$ (Pl. 2 pg. 114, fig. 19 pg. 124) has for midpoint the center $\mathtt{L}_1$ of the sector, and when its length is double the radius a of the sector, one has $a = b$, and by making $\mathtt{L}'\mathtt{L}_1\mathtt{L}_2 = 2\theta = \pi - \epsilon$,

$$r'_1 = r''_1 = a, \; r'_2 = 2a\sin\theta, \; r''_2 = 2a\cos\theta, \; \mathrm{d}\epsilon = -2\mathrm{d}\theta,$$

of a kind such that the value of the moment of rotation becomes

$$a\,ii'\frac{\mathrm{d}\epsilon}{\sin^2\epsilon}(\sin\theta - \cos\theta) = \frac{1}{2}\cdot\frac{a\,ii'\mathrm{d}\theta(\cos\theta - \sin\theta)}{\sin^2\theta\cos^2\theta}.$$

One can deduce from this result a means of verifying my formula by means of an instrument which I will now describe.

13. Description of an instrument designed to verify the results of the theory for conductors of this form

At the two points a, a' (Pl. 2 pg. 114, fig. 20 pg. 124) of the table mn are two elevating supports $ab, a'b'$ of which the upper parts $cb, c'b'$ are insulated; they support a copper strip $\mathtt{H}de\mathtt{H}'d'e'$ folded in half along the line $\mathtt{HH}'$, and which is terminated by two cups $\mathtt{H}$ and $\mathtt{H}'$ where one places mercury. At points $\mathtt{A}$, $\mathtt{C}$, $\mathtt{A}'$, $\mathtt{C}'$, on the table are four cavities also filled with mercury. From $\mathtt{A}$ starts a copper conductor $\mathtt{AEFGSRQ}$, supported by $\mathtt{HH}'$ and terminated by a cup $\mathtt{Q}$; from $\mathtt{A}'$ there starts a second $\mathtt{A}'\mathtt{E}'\mathtt{F}'\mathtt{G}'\mathtt{S}'\mathtt{R}'\mathtt{Q}'$ symmetric to the first; they are both enclosed in silk, in order to be insulated from each other and the conductor $\mathtt{HH}'$. In the cup $\mathtt{Q}$ insert the point of a mobile conductor $\mathtt{QPONMLKIH}$ returning to itself from $\mathtt{K}$ en $\mathtt{I}$, and having in this part its two branches $\mathtt{PO}$,$\mathtt{KI}$ enclosed in silk; it is terminated by a second point inserted in the cup $\mathtt{H}$; $\mathtt{NML}$ form a semicircle of which $\mathtt{LN}$ is the diameter, and $\mathtt{K}$ the center; the stem $\mathtt{PK}p$ is vertical, and terminated at p by a point held by three horizontal circles $\mathtt{B}$,$\mathtt{D}$,$\mathtt{T}$ which can turn about their centers and are designed to reduce friction.

$\mathtt{XY}$ is a fixed shelf which receives in a groove a conductor $\mathtt{VU}ifkhgo\mathtt{ZC}$ returning on itself from g to o and covered by silk in this part; $ifkhg$ is a sector of a circle which has as its center the point k; the parts $\mathtt{U}i$ and go are rectilinear; they traverse at x the support ab, in which there is an opening for this purpose, and which separates from o in order to insert respectively in the cavities $\mathtt{A}$ and $\mathtt{C}$. To the right of $\mathtt{FG}$ there is an assemblage of conductors both fixed and mobile exactly similar to those that we just described, and when one inserts the positive rheophore of the battery into $\mathtt{C}$, and the negative into $\mathtt{C}'$, the electric current passes through the conductors $\mathtt{CZ}oghkfi\mathtt{UV}$,$\mathtt{AEFGSRQ}$; from there it passes into the mobile conductor $\mathtt{QPONMLKIH}$, and connects to $\mathtt{H}'$ by $\mathtt{HH}'$; it then goes through the symmetric mobile conductor $\mathtt{H}'\mathtt{I}'\mathtt{K}'\mathtt{L}'\mathtt{M}'\mathtt{N}'\mathtt{O}'\mathtt{P}'\mathtt{Q}'$, arriving at $\mathtt{Q}'$, then the conductor $\mathtt{Q}'\mathtt{R}'\mathtt{S}'\mathtt{G}'\mathtt{F}'\mathtt{E}'\mathtt{A}'$ which conducts it into the cavity $\mathtt{A}'$, where it connects to $\mathtt{C}'$ by the conductor $\mathtt{V}'\mathtt{U}'i'f'k'h'g'o'\mathtt{Z}'\mathtt{C}'$, and from there to the negative rheophore.

The current flowing in the direction $\mathtt{LN}$ in the diameter $\mathtt{LN}$, and from h to k, then from k to f, in the rays hk, kf, there is repulsion between the rays and the diameter; also, the closed circuit $ghkfi$ does not produce any action on the semi-circle $\mathtt{LMN}$ whose center is found in the fixes axis $p\mathtt{H}$, the mobile conductor can only be set in motion by the action of the sector $ghkfi$ on the diameter $\mathtt{LN}$, it is seen that in all the other parts of the apparatus two opposed currents flow whose actions cancel. Equilibrium will be obtained when the diameter $\mathtt{LN}$, makes equal angles with the rays kf, kh; and if one departs from this position, there will be oscillation solely due to the action of the sector $ghkfi$ on the diameter.

For 2η the angle at the center of the sector, one obtains at the equilibrium position

$$2\theta = \frac{\pi}{2} + \eta \text{ or } \theta = \frac{\pi}{4} + \frac{\eta}{2},$$

from which one concludes

$$\cos\theta - \sin\theta = \cos\theta - \cos\left(\frac{\pi}{2} - \theta\right) = 2\sin\frac{\pi}{4}\sin\left(\frac{\pi}{4} - \theta\right) = -\sqrt{2}\sin\frac{1}{2}\eta,$$

and

$$\sin\theta\cos\theta = \frac{1}{2}\sin 2\theta = \frac{1}{2}\cos\eta;$$

But it is easy to see that when one displaces, from its equilibrium position, the conductor $\mathtt{L'L}$ by an amount equal to $2\mathrm{d}\theta$, the moment of the forces which tend to restore it are composed of those which produce two small sectors whose angles are equal to this displacement, ans whose actions are equal, moment whose value, after that which we have seen just now, is

$$\frac{1}{2}\frac{aii'(\cos\theta - \sin\theta)}{\sin^2\theta\cos^2\theta}\mathrm{d}\theta = -\frac{2aii'\sqrt{2}\sin\frac{1}{2}\eta}{\cos^2\eta}\mathrm{d}\theta.$$

From which it follows that the duration of these oscillations will be, for the same diameter, proportional to

$$\frac{\sqrt{\sin\frac{1}{2}\eta}}{\cos\eta}.$$

Therefore by causing simultaneous oscillations of the mobile conductors in the two symmetric parts of the apparatus, supposing the angles of the sectors are different one will have currents of the same intensity, and one will observe if the numbers of oscillations in the same time, are proportional to the two expressions

$$\frac{\sqrt{\sin\frac{1}{2}\eta}}{\cos\eta} \text{ and } \frac{\sqrt{\sin\frac{1}{2}\eta'}}{\cos\eta'};$$

calling the two angles at the center of the two sectors 2η, and $2\eta'$.

14. Interaction of two rectilinear conductors

We now examine the mutual action of two rectilinear conductors; and we recall first the angle β taken in the direction of the element $\mathrm{d}s'$ and that of the line r, the value of the action that the two electric currents $\mathrm{d}s$ and $\mathrm{d}s'$ exert on each other has already been put in the form

$$ii'\mathrm{d}s'r^k\mathrm{d}(r^k\cos\beta),$$

by multiplying and dividing by $\cos\beta$, and paying attention that $k = -\frac{1}{2}$ gives $r^{2k} = \frac{1}{r}$, we see that one can write it as :

$$\frac{ii'\mathrm{d}s'}{\cos\beta}r^k\cos\beta\mathrm{d}(r^k\cos\beta) = \frac{1}{2}\cdot\frac{ii'\mathrm{d}s'}{\cos\beta}\mathrm{d}\Big(\frac{\cos^2\beta}{r}\Big),$$

from which it is easy for us to conclude that the component of this action following the tangent of the element $\mathrm{d}s'$, is equal to

$$\frac{1}{2}ii'\mathrm{d}s'\mathrm{d}\Big(\frac{\cos^2\beta}{r}\Big),$$

and that the component normal to the same element, is as

$$\frac{1}{2}ii'\mathrm{d}s'\tan\beta\mathrm{d}\Big(\frac{\cos^2\beta}{r}\Big),$$

an expression which can be put in the form

$$\frac{1}{2}ii'\,\mathrm{d}s'\left[\mathrm{d}\Big(\frac{\sin\beta\cos\beta}{r}\Big)-\frac{\mathrm{d}\beta}{r}\right].$$

These values of the two components can be found on page 331 of my *Recueil d'Observations électro-dynamiques*, published in 1822.

Apply this last to the case of two rectilinear parallel currents, situated at a distance a one from the other.

One then has

$$r=\frac{a}{\sin\beta},$$

and the normal component becomes

$$\frac{1}{2}ii'\,\mathrm{d}s'\left[\frac{\mathrm{d}(\sin^2\beta\cos\beta)}{a}-\frac{\sin\beta\,\mathrm{d}\beta}{a}\right].$$

Let $\mathtt{M}'$ (Pl. 2 pg. 114, fig. 21 pg. 124) be any point of a current flowing in the line $\mathtt{L}_1\mathtt{L}_2$; and β',β'' be the angles $\mathtt{L}'\mathtt{M}'\mathtt{L}_2,\mathtt{L}''\mathtt{M}'\mathtt{L}_2$ formed with $\mathtt{L}_1\mathtt{L}_2$ by the extreme vector rays $\mathtt{M}'\mathtt{L}',\mathtt{M}'\mathtt{L}''$; one obtains the action of $\mathrm{d}s'$ on $\mathtt{L}'\mathtt{L}''$ by integrating the preceding expression between the limits β', β'', which gives

$$\frac{1}{2a}ii'\,\mathrm{d}s'(\sin^2\beta''\cos\beta''+\cos\beta''-\sin^2\beta'\cos\beta'-\cos\beta');$$

but one has at each limit, by representing the values of s by b' and b'',

$$s'=b''-a\cot\beta''=b'-a\cot\beta',\quad \mathrm{d}s'=\frac{a\,\mathrm{d}\beta''}{\sin^2\beta''}=\frac{a\,\mathrm{d}\beta'}{\sin^2\beta'};$$

substituting these values and integrating anew between the limits β'_1,β'_2 and β''_1,β''_2, one obtains for the value of the looked for force,

$$\frac{1}{2}ii'\left(\sin\beta''_2-\sin\beta''_1-\sin\beta'_2+\sin\beta'_1-\frac{1}{\sin\beta''_2}+\frac{1}{\sin\beta''_1}+\frac{1}{\sin\beta'_2}-\frac{1}{\sin\beta'_1}\right),$$

where

$$\frac{1}{2}ii'\left(\frac{a}{r''_2}-\frac{a}{r''_1}-\frac{a}{r'_2}+\frac{a}{r'_1}+\frac{r''_1+r'_2-r''_2-r'_1}{a}\right).$$

If the two conductors are of the same length and perpendicular to the lines which join the two extremities of the same side, one has

$$r'_1=r''_2=a,\ \text{ and }\ r'_2=r''_1=c,$$

naming c the diagonal of the rectangle formed by these two lines and the two current directions, the preceding expression then becomes

$$ii'\Big(\frac{c}{a}-\frac{a}{c}\Big)=\frac{ii'l^2}{ac};$$

naming l the length of the conductors, and when this rectangle becomes a square, one has $\frac{ii'}{\sqrt{2}}$ for the value of the force; finally, if one supposes that one of the conductors, indefinite in the two directions, and that l is the length of the other, the terms of r'_1, r'_2, r''_1, r''_2 are found in the denominator disappear; one obtains

$$r'_2 + r''_1 - r''_2 - r'_1 = 2l,$$

and the expression for the force becomes

$$\frac{ii'l}{a},$$

which reduces to ii' when the length l is equal to the distance a.

With regard to the action of two parallel currents in the s' direction, one can obtain what should be the form of the current s. In effect the component which follows $\mathrm{d}s'$ is

$$\frac{1}{2} ii' \mathrm{d}s' \mathrm{d}\left(\frac{\cos^2\beta}{r}\right),$$

the total action exerted by $\mathrm{d}s'$ in this direction on the current $\mathtt{L'L''}$ (Pl. 2 pg. 114, fig. 21 pg. 124) has as its value

$$\frac{1}{2} ii' \mathrm{d}s' \left(\frac{\cos^2\beta''}{r''} - \frac{\cos^2\beta'}{r'}\right),$$

and it is remarkable that it only depends on the position of the extremities $\mathtt{L'}$,$\mathtt{L''}$ of the conductor s; it is therefore the same, whatever the form of the conductor, which can be folded following any line.

If one names a' and a'' the perpendiculars from the two extremities of the portion of the conductor $\mathtt{L'L''}$ which one considers as being mobile, on the rectilinear conductor on which it acts to calculate the parallel action in its direction, one obtains

$$r'' = \frac{a''}{\sin\beta''}, \quad r' = \frac{a'}{\sin\beta},$$

$$\mathrm{d}s' = -\frac{\mathrm{d}r''}{\cos\beta''} = \frac{a''\mathrm{d}\beta''}{\sin^2\beta''} = -\frac{\mathrm{d}r'}{\cos\beta'} = \frac{a'\mathrm{d}\beta'}{\sin^2\beta'},$$

and as a consequence

$$\frac{\mathrm{d}s'}{r''} = \frac{\mathrm{d}s''}{\sin\beta''}, \quad \frac{\mathrm{d}s'}{r'} = \frac{\mathrm{d}\beta'}{\sin\beta'},$$

from which it is easy to conclude that the looked for integral is

$$-\frac{1}{2} ii' \int \left(\frac{\cos^2\beta''\mathrm{d}\beta''}{\sin\beta''} - \frac{\cos^2\beta'\mathrm{d}\beta'}{\sin\beta'}\right)$$

$$= -\frac{1}{2} ii' \left(\ln\frac{\tan\frac{1}{2}\beta''}{\tan\frac{1}{2}\beta'} + \cos\beta'' - \cos\beta' + \mathtt{C}\right).$$

It is necessary to take this integral between the limits determined by the two extremities of the rectilinear conductor; naming, β'_1, β'_2 and β''_1, β''_2 the values of β' and of β'' relative

to these limits, one has here-and-now that of the force exerted by the rectilinear conductor, and this last value only depends on the four angles $\beta'_1, \beta''_1, \beta'_2, \beta''_2$.

When one wants the value of this force for the case where the rectilinear conductor extends indefinitely in both directions, it is necessary to set $\beta'_1 = \beta''_1 = 0$, and $\beta'_2 = \beta''_2 = \pi$, it appears at first glance they become null, which is contrary to experiments; but one sees easily that the part of the integral where cosines of these four angles enter is the only place where they vanish in this case, and that the rest of the integral

$$\frac{1}{2} ii' \left(\ln \frac{\tan \frac{1}{2}\beta''_1}{\tan \frac{1}{2}\beta'_1} - \ln \frac{\tan \frac{1}{2}\beta''_2}{\tan \frac{1}{2}\beta'_2} \right)$$

$$= \frac{1}{2} ii' \ln \frac{\tan \frac{1}{2}\beta''_1 \cot \frac{1}{2}\beta''_2}{\tan \frac{1}{2}\beta'_1 \cot \frac{1}{2}\beta'_2}$$

becomes, because one has $\beta''_2 = \pi - \beta''_1$ and $\beta'_2 = \pi - \beta'_1$,

$$\frac{1}{2} ii' \ln \frac{\tan^2 \frac{1}{2}\beta''_1}{\tan^2 \frac{1}{2}\beta'_1} = ii' \ln \frac{\tan \frac{1}{2}\beta''_1}{\tan \frac{1}{2}\beta'_1} = ii' \ln \frac{a''}{a'}.$$

This value shows that the force that is looked for can only depend on the relation of the two perpendiculars a' and a'', dropped onto the indefinite rectilinear conductor whose two extremities of the portion of the conductor on which it acts; which is also independent of the form of this portion, and only becomes null, as it should be, when the two perpendiculars are equal to each other.

To obtain the distance of this force to the rectilinear conductor whose direction is parallel to its own, it is necessary to multiply each one of the elementary forces composing it by its distance to the conductor, and integrate the result with respect to the same limits; one will thus obtain the moment which must be divided by the force in order to obtain the looked for distance.

One easily finds, using the values above, that the elementary moment has as its value

$$\frac{1}{2} ii' \mathrm{d}s' r \sin \beta \mathrm{d} \frac{\cos^2 \beta}{r}.$$

This value can only be integrated when one has substituted in this expression for one of the variables r or β its value as a function of the other, taken from the equations which determine the form of the mobile portion of the conductor; this is very simple when this portion is on a line elevated by an arbitrary point of the rectilinear conductor which one considers as fixed, perpendicular to its direction, because by taking this point for the origin of the s', one has

$$r = -\frac{s'}{\cos \beta},$$

and since s' is a constant relative to the differential

$$\mathrm{d} \frac{\cos^2 \beta}{r}.$$

The value of the elementary moment becomes

$$\frac{1}{2}ii'\,\mathrm{d}s'\frac{\sin\beta}{\cos\beta}\mathrm{d}(\cos^3\beta) = -\frac{3}{2}ii'\,\mathrm{d}s'\sin^2\beta\cos\beta\mathrm{d}\beta,$$

whose integral between the limits β'' and β' is

$$-\frac{1}{2}ii'\,\mathrm{d}s'(\sin^3\beta'' - \sin^3\beta').$$

By replacing $\mathrm{d}s'$ by the values of this differential found above, and by integrating again, one has, between the limits determined by the rectilinear conductor,

$$\frac{1}{2}ii'\big[a''(\cos\beta_2'' - \cos\beta_1'') - a'(\cos\beta_2' - \cos\beta_1')\big].$$

If one supposes that the conductor extends indefinitely in both directions, it would be necessary to give to β_1', β_1'' and β_2', β_2'', the values which we have already assigned to them in this case, and one obtains

$$-ii'(a'' - a')$$

for the sought for value of the moment, which will be, as a consequence, proportional to the length $a'' - a'$ of the mobile conductor, and and will not change at all due to the fact this length remains the same, whatever the values of the other distances of the extremities of this last conductor which is considered as fixed.

Calculate now the action exerted by an arc of an arbitrary curve NM in order to turn an arc of the circle $\mathtt{L_1L_2}$, about its center.

Let M′ (Pl. 2 pg. 114, fig. 23 pg. 125) be the mid point of an arbitrary element $\mathrm{d}s'$ of the arc $\mathtt{L_1L_2}$, and a the radius of the circle. The moment of an element $\mathrm{d}s$ of NM in order to cause $\mathrm{d}s'$ to turn about the center O obtained by multiplying the tangent component in M′ by its distance a at the fixed point; which gives

$$\frac{1}{2}aii'\,\mathrm{d}s'\mathrm{d}\frac{\cos^2\beta}{r}.$$

Taking β', β'' and r', r'' to be the values of β and r relative to the limits M and N, one has for the rotational moment of $\mathrm{d}s'$

$$\frac{1}{2}a\,ii'\,\mathrm{d}s'\left(\frac{\cos^2\beta''}{r''} - \frac{\cos^2\beta'}{r'}\right),$$

a result which only depends on the position of the extremities of M and N.

We carry out the calculation by assuming that the line MN has a diameter $\mathtt{L'L''}$ of the same circle.

Take 2θ to be the angle $\mathtt{M'OL'}$; $\mathtt{M'T'}$ being the tangent at M′, the angles $\mathtt{L'M'T'}$, $\mathtt{L''M'T'}$ are respectively β' and β'', and one obviously obtains

$$\cos\beta' = -\cos\theta,\ \ \cos\beta'' = \sin\theta,\ \ r' = 2a\sin\theta,\ \ r'' = 2a\cos\theta.$$

The action of the diameter $\mathtt{L'L''}$ to cause turning of the element situated at $\mathtt{M'}$ will then be

$$\frac{1}{4} ii' \mathrm{d}s' \left(\frac{\sin^2 \theta}{\cos \theta} - \frac{\cos^2 \theta}{\sin \theta} \right).$$

If one takes an arbitrary point $\mathtt{A}$ of the circumference as the origin of the arcs, and make $\mathtt{AL'} = \mathtt{C}$, one has

$$s' = \mathtt{C} + 2a\theta \quad \text{and} \quad \mathrm{d}s' = 2a\mathrm{d}\theta$$

which changes the preceding expression into

$$\frac{1}{2} a\, ii' \left(\frac{\sin^2 \theta \mathrm{d}\theta}{\cos \theta} - \frac{\cos^2 \theta \mathrm{d}\theta}{\sin \theta} \right),$$

which must be integrated over the entire extent of the arc $\mathtt{L}_1, \mathtt{L}_2$, in order to have the rotational moment of this arc about its center.

However one has

$$\int \frac{\sin^2 \theta \mathrm{d}\theta}{\cos \theta} = \ln \tan \left(\frac{\pi}{4} + \frac{1}{2}\theta \right) - \sin \theta + \mathtt{C}_1,$$
$$\int \frac{\cos^2 \theta \mathrm{d}\theta}{\sin \theta} = \ln \tan \frac{1}{2}\theta + \cos \theta + \mathtt{C}' :$$

if then one calls $2\theta_1$, and $2\theta_2$, the angles $\mathtt{L'OL}_1$, and $\mathtt{L'OL}_2$, the total moment of the arc $\mathtt{L}_1\mathtt{L}_2$ becomes

$$\frac{a}{2} ii' \left\{ \ln \frac{\tan \left(\frac{\pi}{4} + \frac{1}{2}\theta_2 \right) \tan \frac{1}{2}\theta_1}{\tan \frac{1}{2}\theta_2 \tan \left(\frac{\pi}{4} + \frac{1}{2}\theta_1 \right)} - \sin \theta_2 - \cos \theta_2 + \sin \theta_1 + \cos \theta_1 \right\}.$$

This expression, changing the sign, gives the value of the rotational moment of the diameter $\mathtt{L'L''}$ due to the action of the arc $\mathtt{L}_1\mathtt{L}_2$.

In an apparatus which I just described, a conductor which has the form of a circular sector, acts on another conductor composed of a diameter and of a half-circumference which is mobile about an axis passing through the center of this semi-circumference and perpendicular to its plane. The action which it experiences from the part of the sector is destroyed by the resistance of the axis, since the contour which forms the sector is closed; there only remains the action on the diameter. We have already calculated that of the arc, it remains for us in addition to obtain whose of the radii of this sector on the same diameter.

For determining these, we will look for the rotational moment which results from the mutual action of two rectilinear currents situated in the same plane, and which tend to cause them to turn in the contrary direction about the point of intersection of their directions.

The component normal to the element $\mathrm{d}s'$ located in $\mathtt{M'}$ (Pl. 2 pg. 114, fig. 24 pg. 125), is, as we have seen previously,

$$\frac{1}{2} ii' \mathrm{d}s' \left(\mathrm{d} \frac{\sin \beta \cos \beta}{r} - \frac{\mathrm{d}\beta}{r} \right).$$

The moment of $\mathrm{d}s$ which causes rotation of $\mathrm{d}s'$ about $\mathtt{O}$, is obtained by multiplying that force by s'; one then obtains, naming $\mathtt{M}$ the total moment,

$$\frac{\mathrm{d}^2\mathtt{M}}{\mathrm{d}s\mathrm{d}s'}\mathrm{d}s\mathrm{d}s' = \frac{1}{2}ii's'\mathrm{d}s'\left(\mathrm{d}\frac{\sin\beta\cos\beta}{r} - \frac{\mathrm{d}\beta}{r}\right),$$

from which, by integrating with respect to s,

$$\frac{\mathrm{d}\mathtt{M}}{\mathrm{d}s'}\mathrm{d}s' = \frac{1}{2}ii's'\mathrm{d}s'\left(\mathrm{d}\frac{\sin\beta\cos\beta}{r} - \int\frac{\mathrm{d}\beta}{r}\right).$$

But, following the manner in which the angles were determined in the calculation of the formula which represents the mutual action of two elements of voltaic conductors, the angle $\mathtt{MM'L}_2 = \beta$ is exterior of the triangle $\mathtt{OMM'}$; and, naming ϵ the angle $\mathtt{MOM'}$ which is between the directions of the two currents, one finds that the third angle $\mathtt{OMM'}$ is equal to $\beta - \epsilon$, which gives

$$r = \frac{s'\sin\epsilon}{\sin(\beta-\epsilon)},$$

one has therefore

$$\frac{\mathrm{d}\mathtt{M}}{\mathrm{d}s'}\mathrm{d}s' = \frac{1}{2}ii'\frac{\mathrm{d}s'}{\sin\epsilon}\big[\cos\beta\sin\beta\sin(\beta-\epsilon) + \cos(\beta-\epsilon) + \mathtt{C}\big].$$

By replacing in this value $\cos(\beta-\epsilon)$ by

$$\cos^2\beta\cos(\beta-\epsilon) + \sin^2\beta\cos(\beta-\epsilon),$$

one easily sees that it reduces to

$$\frac{\mathrm{d}\mathtt{M}}{\mathrm{d}s'}\mathrm{d}s' = \frac{1}{2}ii'\frac{\mathrm{d}s'}{\sin\epsilon}\big[\cos\epsilon\cos\beta + \sin^2\beta\cos(\beta-\epsilon) + \mathtt{C}\big]$$

which must be taken between the limits β' and β''; one has thus the difference between two functions of the same form, one with β'' the other with β', which must be newly integrated to obtain the rotational moment which is looked for : it suffices to make this second integration on just one of these two quantities : since a'' the distance $\mathtt{OL''}$ which corresponds to β'', one has, in the triangle $\mathtt{OM'L''}$,

$$s' = \frac{a''\sin(\beta''-\epsilon)}{\sin\beta''} = a''\cos\epsilon - a''\sin\epsilon\cot\beta'', \qquad \mathrm{d}s' = \frac{a''\sin\epsilon\mathrm{d}\beta''}{\sin^2\beta''};$$

and the quantity that we propose first to integrate, becomes

$$\frac{1}{2}a''ii''\left[\frac{\cos\epsilon\cos\beta''\mathrm{d}\beta''}{\sin^2\beta''} + \cos(\beta''-\epsilon)\mathrm{d}\beta''\right],$$

whose integral taken between the limits β_1'' and β_2'' is

$$\frac{1}{2}a''ii''\left[\sin(\beta_2''-\epsilon) - \sin(\beta_2''-\epsilon) - \frac{\cos\epsilon}{\sin\beta_2''} + \frac{\cos\epsilon}{\sin\beta_1''}\right].$$

By designating by p_2'' and p_1'', the perpendiculars from the point $\mathtt{O}$ on the distances $\mathtt{L}''\mathtt{L}_2 = r_2''$, $\mathtt{L}''\mathtt{L}_1 = r_1''$, one has obviously

$$a'' \sin(\beta_2'' - \epsilon) = p_2'', \quad a'' \sin(\beta_1'' - \epsilon) = p_1'', \quad \frac{a''}{\sin \beta_2''} = \frac{r_2''}{\sin \epsilon}, \quad \frac{a''}{\sin \beta_1''} = \frac{r_1''}{\sin \epsilon},$$

and the preceding integral becomes

$$\frac{1}{2} ii' \left[p_2'' - p_1'' - (r_2'' - r_1'') \cot \epsilon \right].$$

If one pays attention when designating the distance $\mathtt{OL}'$ by a', one has also, in the triangle $\mathtt{OM}'\mathtt{L}'$,

$$s' = \frac{a' \sin(\beta' - \epsilon)}{\sin \beta'} = a' \cos \epsilon - a' \sin \epsilon \cot \beta', \qquad \mathrm{d}s' = \frac{a' \sin \epsilon \mathrm{d}\beta'}{\sin^2 \beta'},$$

it is easy to see that the integral of the other quantity is formed from the one that we have obtained, by there changing $p_2'', p_1'', r_2'', r_1''$, into p_2', p_1', r_2', r_1'; which gives for the value of the rotational moment which is the difference of the two integrals,

$$\frac{1}{2} ii' \Big[p_2'' - p_1'' - p_2' + p_1' - (r_2'' - r_1'' - r_2' + r_1') \cot \epsilon \Big].$$

This value reduces to the one that we found above, in the case where the angle ϵ is a right angle, because then $\cot \epsilon = 0$.

When one assumes that the two currents leave the point $\mathtt{O}$, and that their lengths $\mathtt{OL}'', \mathtt{OL}_2$ (Pl. 2 pg. 114, fig. 22 pg. 125) are represented respectively by a and b, the perpendicular $\mathtt{OP}$ by p, and the distance $\mathtt{L}''\mathtt{L}_2$ by r, one has $p_2'' = p$, $p_1'' = p_2' = p_1' = 0$, $r_2'' = r$, $r_1'' = a$, $r_2' = b$, $r_1' = 0$, and

$$\frac{1}{2} ii' \Big[p + (a + b - r) \cot \epsilon \Big],$$

for the value which is taken by the rotational moment.

The quantity $a+b-r$, excess of the sum of two sides of a triangle on the third, is always positive : from which it follows that the rotational moment is larger than the value $\frac{1}{2} ii' p$ which it takes when the angle ϵ of the two conductors is a right angle, since $\cot \epsilon$ is positive, that is as the angle is acute; but it becomes smaller when the same angle is obtuse, because otherwise $\cot \epsilon$ would be negative. It is evident moreover that its value is even greater than the angle ϵ is smaller, and that it goes to infinity as $\cot \epsilon$ proportionally as ϵ approaches zero; but it is good to demonstrate that it stays always positive, however near the angle is to two right angles.

It is sufficient for this to pay attention when naming α the angle of the triangle $\mathtt{OL}''\mathtt{L}_2$ between the sides a and r, and β which is the one between the sides b and r, one has

$$\cot \epsilon = -\cot(\alpha + \beta), \quad p = a \sin \alpha = b \sin \beta, \quad r = a \cos \alpha + b \cos \beta,$$

and as a consequence

$$\begin{aligned} a + b - r &= a(1 - \cos \alpha) + b(1 - \cos \beta), \\ &= p \tan \frac{1}{2} \alpha + p \tan \frac{\pi}{2} \beta, \end{aligned}$$

and

$$\frac{1}{2}ii'\big[p+(a+b-r)\cot\epsilon\big]=\frac{1}{2}ii'p\left(1-\frac{\tan\frac{1}{2}\alpha+\tan\frac{1}{2}\beta}{\tan(\alpha+\beta)}\right),$$

value which stays always positive, however small the angles α and β become, since $\tan(\alpha+\beta)$, for angles less than $\frac{\pi}{4}$, is always larger than $\tan\alpha+\tan\beta$, and for stronger reason more than $\tan\frac{1}{2}\alpha+\tan\frac{1}{2}\beta$. This value tends surely toward the limit $\frac{1}{4}ii'p$ as the angles α and β approach zero; they vanish with p when these angles become null.

Recall now the general value of the rotational moment in which enter only the distances $\mathtt{OL}''=\mathtt{a}''$ (Pl. 2 pg. 114, fig. 24 pg. 125), $\mathtt{OL}'=a'$, and the various angles, the value of which is

$$\frac{1}{2}ii'\Big[a''\sin(\beta_2''-\epsilon)-a''\sin(\beta_1''-\epsilon)-a'\sin(\beta_2'-\epsilon)+a'\sin(\beta_1'-\epsilon)$$
$$-\frac{a''\cos\epsilon}{\sin\beta_2''}+\frac{a''\cos\epsilon}{\sin\beta_1''}+\frac{a'\cos\epsilon}{\sin\beta_2'}-\frac{a'\cos\epsilon}{\sin\beta_1'}\Big],$$

and apply this to the case where one of the conductors $\mathtt{L}'\mathtt{L}''$ (Pl. 2 pg. 114, fig. 25 pg. 126) is rectilinear and mobile about its center $\mathtt{L}_1$, and when the other starts from this center. Taking $\mathtt{L}'\mathtt{L}''=2a$, one has

$$a''=a,\ \ a'=-a,\ \ \beta_1'=\pi+\epsilon,\ \ \beta_1''=\epsilon,\ \ \sin\beta_1'=-\sin\beta_1'',$$

and by designating as before the perpendiculars dropped from $\mathtt{L}$ onto $\mathtt{L}'\mathtt{L}_2$ and $\mathtt{L}''\mathtt{L}_2$, the expression for the moment becomes

$$\frac{1}{2}ii'\left(p_2''+p_2'-\frac{a\cos\epsilon}{\sin\beta_2''}-\frac{a\cos\epsilon}{\sin\beta_2'}\right).$$

Or

$$\sin\beta_2''\ :\ a\ ::\ \sin\epsilon\ :\ r_2''\quad\text{ and }\quad-\sin\beta_2'\ :\ a\ ::\ \sin\epsilon\ :\ r_2',$$

and the values of r_2'' and of r_2' taken from these proportions and substituted into the preceding expression changing it to

$$\frac{1}{2}ii'\Big[p_2''+p_2'+\cot\epsilon(r_2'-r_2'')\Big].$$

When one assumes $\mathtt{L}_1\mathtt{L}_2$ to be infinite, one has $p_2''=p_2'=a\sin\epsilon$, $r_2'-r_2''=2a\cos\epsilon$, and this value of the moment reduces to

$$\frac{1}{2}aii'\left(2\sin\epsilon+\frac{2\cos^2\epsilon}{\sin\epsilon}\right)=\frac{aii''}{\sin\epsilon};$$

it is therefore by the inverse of the sin of the angle between the two currents, and proportional to the length of the finite current.

When $\mathtt{L}_1\mathtt{L}_2=\frac{1}{2}\mathtt{L}'\mathtt{L}''=a$ and if one represents the angle by $\mathtt{L}'\mathtt{L}_1\mathtt{L}_2$ by 2θ, one has $p_2''=a\sin\theta$, $p_2'=a\cos\theta$, $r_2'=2a\sin\theta$, $r_2''=2a\cos\theta$, $\cot\epsilon=-\cot 2\theta$, and the moment becomes

$$\frac{1}{2}aii'\big[\cos\theta+\sin\theta+2\cot 2\theta(\cos\theta-sin\theta)\big],$$

by replacing $2\cot 2\theta$ by its value

$$\frac{1-\tan^2\theta}{\tan\theta}=\frac{\cos^2\theta-\sin^2\theta}{\sin\theta\cos\theta}=\frac{(\cos\theta+\sin\theta)(\cos\theta-\sin\theta)}{\sin\theta\cos\theta},$$

one finds that that of the moment is equal to

$$\frac{1}{2}aii'(\cos\theta+\sin\theta)\left[1+\frac{(\cos\theta-\sin\theta)^2}{\sin\theta\cos\theta}\right]=\frac{1}{2}aii'(\cos\theta+\sin\theta)\left(\frac{1}{\sin\theta\cos\theta}-1\right).$$

To obtain the sum of the actions of two radii between which is an infinitely small sector of which the arc is $\mathrm{d}\epsilon$, it is necessary to pay attention that these two radii will be traversed in a contrary direction, this sum is equal to the differential of the preceding expression; one finds thus that it is represented by

$$\begin{aligned}&\frac{1}{2}aii'\left[(\cos\theta-\sin\theta)\left(\frac{1}{\sin\theta\cos\theta}-1\right)-\frac{(\cos\theta+\sin\theta)(\cos^2\theta-\sin^2\theta)}{\sin^2\theta\cos^2\theta}\right]\mathrm{d}\theta\\ =&\frac{1}{2}aii'(\cos\theta-\sin\theta)\left(\frac{1}{\sin\theta\cos\theta}-1-\frac{\cos\theta+\sin\theta)^2}{\sin^2\theta\cos^2\theta}\right)\mathrm{d}\theta\\ =&-\frac{1}{2}aii'(\cos\theta-\sin\theta)\left(\frac{1}{sin^2\theta\cos^2\theta}+\frac{1}{\sin\theta\cos\theta}+1\right)\mathrm{d}\theta.\end{aligned}$$

But the action of the arc $\mathtt{L_2L_3}$ on the diameter $\mathtt{L'L''}$ is equal and opposed to that which the diameter exerts on the arc to cause it to turn on its center; the moment of this action, following that which we just saw, is therefore equal to

$$\frac{1}{2}aii'\left(\frac{\cos^2\theta}{\sin\theta}-\frac{\sin^2\theta}{\cos\theta}\right)\mathrm{d}\theta=\frac{1}{2}aii'(\cos\theta-\sin\theta)\left(\frac{1}{\sin\theta\cos\theta}+1\right)\mathrm{d}\theta;$$

by adding to the preceding, one has for this result of the action of the infinitely small sector on the diameter $\mathtt{L'L''}$

$$-\frac{1}{2}aii'(\cos\theta-\sin\theta)\frac{\mathrm{d}\theta}{\sin\theta\cos\theta}.$$

This value only differs in the sign of the one we have already found for the same moment, the difference comes obviously from what we extracted from the last formula relative to the action of a very small closed circuit on an element where we have changed the sign of $\mathtt{C}$ to make it positive;

Examine now the action of two rectilinear currents, which are not in the same plane, exerting on one another, whether to move in parallel with their common perpendicular, or to turn about this line.

For the two currents $\mathtt{AU}, \mathtt{A'U}$ (Pl. 2 pg. 114, fig. 26 pg. 126); $\mathtt{AA'}=a$, their common perpendicular; $\mathtt{AV}$ a parallel to $\mathtt{A'U'}$: the action of two elements located in $\mathtt{M}$ and $\mathtt{M'}$, if one sets $n=2$ and $h=k-1=-\frac{3}{2}$ in the general formula

$$\frac{ii'\mathrm{d}s\mathrm{d}'}{r^n}(\cos\epsilon+h\cos\theta\cos\theta'),$$

becomes

$$\frac{1}{2}\cdot\frac{ii'\mathrm{d}s\mathrm{d}s'\left(2\cos\epsilon+3\frac{\mathrm{d}r}{\mathrm{d}s}\cdot\frac{\mathrm{d}r}{\mathrm{d}s'}\right)}{r^2},$$

because

$$\cos\theta = \frac{\mathrm{d}r}{\mathrm{d}s}, \quad \cos\theta' = -\frac{\mathrm{d}r}{\mathrm{d}s'};$$

but on making $\mathtt{AM} = s$, $\mathtt{A'M'} = s'$, $\mathtt{VAU} = \epsilon$, one has

$$r^2 = a^2 + s^2 + s^{2'} - 2ss'\cos\epsilon,$$

where

$$r\frac{\mathrm{d}r}{\mathrm{d}s} = s - s'\cos\epsilon, \quad r\frac{\mathrm{d}r}{\mathrm{d}s'} = s' - s\cos\epsilon, \quad r\frac{\mathrm{d}^2 r}{\mathrm{d}s\mathrm{d}s'} + \frac{\mathrm{d}r}{\mathrm{d}s}\cdot\frac{\mathrm{d}r}{\mathrm{d}s'} = -\cos\epsilon;$$

and as

$$\frac{\mathrm{d}\frac{1}{r}}{\mathrm{d}s} = -\frac{\frac{\mathrm{d}r}{\mathrm{d}s}}{r^2}, \quad \frac{\mathrm{d}^2\frac{1}{r}}{\mathrm{d}s\mathrm{d}s'} = -\frac{r\frac{\mathrm{d}^2 r}{\mathrm{d}s\mathrm{d}s'} - \frac{\mathrm{d}r}{2\mathrm{d}s}\cdot\frac{\mathrm{d}r}{\mathrm{d}s'}}{r^3} = \frac{\cos\epsilon + 3\frac{\mathrm{d}r}{\mathrm{d}s}\cdot\frac{\mathrm{d}r}{\mathrm{d}s'}}{r^3},$$

the value of the action of the two elements becomes

$$\frac{1}{2}ii'\mathrm{d}s\mathrm{d}s'\left(\frac{\cos\epsilon}{r^2} + r\frac{d^2\frac{1}{r}}{\mathrm{d}s\mathrm{d}s'}\right).$$

In order to have the component parallel to $\mathtt{AA'}$, it is necessary to multiply that expression by the cosine of the angle $\mathtt{MM'P}$ which makes $\mathtt{MM'}$ with $\mathtt{M'P}$ parallel to $\mathtt{AA'}$, that is to say by $\frac{\mathtt{M'P}}{\mathtt{M'M}}$ or $\frac{a}{r}$, which gives

$$\frac{1}{2}a\,ii'\mathrm{d}s\mathrm{d}s'\left(\frac{\cos\epsilon}{r^3} + \frac{d^2\frac{1}{r}}{\mathrm{d}s\mathrm{d}s'}\right);$$

and by integrating over the total extent of the two currents, one finds for the total action

$$\frac{1}{2}a\,ii'\left(\frac{1}{r} + \cos\epsilon\int\int\frac{\mathrm{d}s\mathrm{d}s'}{r^3}\right).$$

If the two currents form between them a right angle, one has $\cos\epsilon = 0$, and the action parallel to $\mathtt{AA'}$ is reduced, by taking the integral between the natural limits, and by employing the same notation as above, to

$$\frac{1}{2}ii'\left(\frac{a}{r''_2} - \frac{a}{r''_1} - \frac{a}{r'_2} + \frac{a}{r'_1}\right).$$

This expression is proportional to the shortest distance of the currents, and becomes as a consequence null when they are in the same plane, as should be obvious. If the currents are parallel, one has $\epsilon = 0$ and

$$r^2 = a^2 + (s - s')^2,$$

from which

$$\begin{aligned}\int\int\frac{\mathrm{d}s\mathrm{d}s'}{r^3} &= \int\mathrm{d}s'\int\frac{\mathrm{d}s}{[a^2 + (s-s')^2]^{\frac{3}{2}}}\\ &= \int\mathrm{d}s'\frac{s - s'}{a^2\sqrt{a^2 + (s-s')^2}}\\ &= -\frac{\sqrt{a^2 + (s-s')^2}}{a^2}\\ &= -\frac{r}{a^2},\end{aligned}$$

that is to say between the limits of the integrations

$$\frac{r'_2 + r''_1 - r'_1 - r''_2}{a^2};$$

and since $\cos\epsilon = 1$, the total action becomes

$$\frac{1}{2}ii'\left(\frac{a}{r''_2} - \frac{a}{r'_2} - \frac{a}{r''_1} + \frac{a}{r'_1} + \frac{r''_1 + r'_2 - r''_2 - r'_1}{a}\right).$$

We will see later how to carry out the integration in the case where the angle ϵ is arbitrary.

We search now the rotational moment about the common perpendicular: for this it is necessary to know first the component following MP, and multiply it by the perpendicular AQ from A onto MP, which amounts to multiplying the force following MM′ by $\frac{\mathrm{MP}}{\mathrm{MM'}} \cdot \mathrm{AQ}$, or by $\frac{ss'\sin\epsilon}{r}$; one thus obtains

$$\frac{1}{2}ii'\sin\epsilon\left(ss'\frac{d^2\frac{1}{r}}{\mathrm{d}s\mathrm{d}s'}\mathrm{d}s\mathrm{d}s' + ss'\frac{\cos\epsilon\mathrm{d}s\mathrm{d}s'}{r^3}\right);$$

setting $\frac{ss'}{r} = q$, one obtains

$$\frac{\mathrm{d}q}{\mathrm{d}s} = \frac{s'}{r} + \frac{ss'\mathrm{d}\frac{1}{r}}{\mathrm{d}s},$$

and

$$\begin{aligned}\frac{d^2q}{\mathrm{d}s\mathrm{d}s'} &= \frac{1}{r} - \frac{s'}{r^2}\cdot\frac{\mathrm{d}r}{\mathrm{d}s'} - \frac{s}{r^2}\cdot\frac{\mathrm{d}r}{\mathrm{d}s} + ss'\frac{\mathrm{d}^2\frac{1}{r}}{\mathrm{d}s\mathrm{d}s'}\\ &= \frac{1}{r} - \frac{s'(s' - s\cos\epsilon) + s(s - s'\cos\epsilon)}{r^3} + ss'\frac{\mathrm{d}^2\frac{1}{r}}{\mathrm{d}s\mathrm{d}s'};\end{aligned}$$

and by reducing

$$\frac{d^2q}{\mathrm{d}s\mathrm{d}s'} = \frac{a^2}{r^3} + \frac{ss'\mathrm{d}^2\frac{1}{r}}{\mathrm{d}s\mathrm{d}s'},$$

from which one extracts

$$ss'\frac{\mathrm{d}^2\frac{1}{r}}{\mathrm{d}s\mathrm{d}s'} = \frac{\mathrm{d}^2q}{\mathrm{d}s\mathrm{d}s'} - \frac{a^2}{r^3}$$

Now, we have previously found

$$r\frac{d^2r}{\mathrm{d}s\mathrm{d}s'} + \frac{\mathrm{d}r}{\mathrm{d}s}\cdot\frac{\mathrm{d}r}{\mathrm{d}s'} = -\cos\epsilon;$$

or

$$r\frac{d^2r}{\mathrm{d}s\mathrm{d}s'} + \frac{(s - s'\cos\epsilon)(s' - s\cos\epsilon)}{r^2} = -\cos\epsilon;$$

carrying out the multiplication and replacing $s^2 + s'^2$ by its value

$$r^2 = a^2 + s^2 + s'^2 - 2ss'\cos\epsilon,$$

one obtains by reduction

$$\frac{\mathrm{d}^2r}{\mathrm{d}s\mathrm{d}s'} + \frac{ss'\sin^2\epsilon + a^2\cos\epsilon}{r^3} = 0,$$

from which

$$\frac{ss'}{r^3} = -\frac{1}{\sin^2\epsilon}\left(\frac{\mathrm{d}^2 r}{\mathrm{d}s\mathrm{d}s'} + \frac{a^2\cos\epsilon}{r^3}\right).$$

Substituting this value and also that of $ss'\frac{\mathrm{d}^2\frac{1}{r}}{\mathrm{d}s\mathrm{d}s'}$ into the expression for the rotational moment of the element, it becomes

$$\begin{aligned}
&\frac{1}{2}ii'\sin\epsilon\mathrm{d}s\mathrm{d}s'\left[\frac{\mathrm{d}^2 q}{\mathrm{d}s\mathrm{d}s'} - \frac{a^2}{r^3} - \frac{\cos\epsilon}{\sin^2\epsilon}\left(\frac{\mathrm{d}^2 r}{\mathrm{d}s\mathrm{d}s'} + \frac{a^2\cos\epsilon}{r^3}\right)\right]\\
=&ii'\mathrm{d}s\mathrm{d}s'\left(\sin\epsilon\frac{\mathrm{d}^2 q}{\mathrm{d}s\mathrm{d}s'} - \frac{a^2\sin\epsilon}{r^3} - \cot\epsilon\frac{\mathrm{d}^2 r}{\mathrm{d}s\mathrm{d}s'} - \frac{\cos^2\epsilon}{\sin\epsilon}\cdot\frac{a^2}{r^3}\right)\\
=&ii'\mathrm{d}s\mathrm{d}s'\left(\sin\epsilon\frac{\mathrm{d}^2 q}{\mathrm{d}s\mathrm{d}s'} - \cot\epsilon\frac{\mathrm{d}^2 r}{\mathrm{d}s\mathrm{d}s'} - \frac{1}{\sin\epsilon}\cdot\frac{a^2}{r^3}\right)
\end{aligned}$$

and integrating with respect to s and s', one has for the total moment

$$\frac{1}{2}ii'\left(q\sin\epsilon - r\cot\epsilon - \frac{a^2}{\sin\epsilon}\int\int\frac{\mathrm{d}s\mathrm{d}s'}{r^3}\right);$$

the calculation is thus reduced, as before, to finding the value of the double integral $\int\int\frac{\mathrm{d}s\mathrm{d}s'}{r^3}$.

If the currents are in the same plane, one has $a = 0$, and the moment reduces to

$$\frac{1}{2}ii'(q\sin\epsilon - r\cot\epsilon),$$

a result which coincides with that which we have obtained in directly treating two currents situated in the same plane. Since q is nothing but $\frac{ss'}{r}$ and r being $\mathtt{MP}$, one has

$$q\sin\epsilon = \frac{ss'\sin\epsilon}{r} = \frac{\mathtt{MP}\cdot\mathtt{AQ}}{\mathtt{MP}} = \mathtt{AQ};$$

and we have found by the other procedure,

$$\frac{1}{2}ii'(p - r\cot\epsilon);$$

p designates the perpendicular $\mathtt{AQ}$: the two results are therefore identical. The integration carried out between the limits gives

$$\frac{1}{2}ii'\left[p_2'' - p_1'' - p_2' + p_1' + \cot\epsilon(r_1'' + r_2' - r_2'' - r_1')\right];$$

if the angle ϵ is a right angle, this moment reduces to

$$\frac{1}{2}ii'(p_2'' - p_1'' - p_2' + p_1').$$

When $\epsilon = \frac{\pi}{2}$, but a is not null, the moment above becomes

$$\frac{1}{2}ii'\left(q - a^2\int\int\frac{\mathrm{d}s\mathrm{d}s'}{r^3}\right).$$

The integral that needs to be calculated in this case is

$$\int \mathrm{d}s' \int \frac{\mathrm{d}s}{r^3} = \int \mathrm{d}s' \int \frac{\mathrm{d}s}{(a^2+s^2+s'^2)^{\frac{3}{2}}} = \int \frac{s}{(a^2+s'^2)\sqrt{a^2+s^2+s'^2}}\mathrm{d}s',$$

which must be integrated over again with respect to s'; it becomes

$$\begin{aligned}
\int \frac{s\mathrm{d}s'}{(a^2+s'^2)\sqrt{a^2+s^2+s'^2}} &= \int \frac{(a^2+s^2)s\mathrm{d}s'}{(a^4+a^2s'^2+a^2s^2+s^2s'^2)\sqrt{a^2+s^2+s'^2}} \\
&= \int \frac{s(a^2+s^2)\frac{\mathrm{d}s'}{\sqrt{a^2+s^2+s'^2}}}{a^2(a^2+s^2+s'^2)+s^2s'^2} \\
&= \int \frac{s(a^2+s^2)\mathrm{d}s'}{\frac{(a^2+s^2+s'^2)^{\frac{3}{2}}}{a^2+\frac{s^2s'^2}{a^2+s^2+s'^2}}} \\
&= \int \frac{\frac{\mathrm{d}q}{\mathrm{d}s'}\mathrm{d}s'}{a^2+q^2} \\
&= \frac{1}{a}\arctan\frac{q}{a} + \mathtt{C}.
\end{aligned}$$

For $\mathtt{M}$ the value of the rotational moment when the two electric currents, of which the lengths are s and s', starting points where their directions meet the line which measures the shortest distance between them, one obtains

$$\mathtt{M} = \frac{1}{2}ii'\Big(q - a\arctan\frac{q}{a}\Big),$$

an expression which reduces, when $a = 0$, at $\mathtt{M} = \frac{1}{2}ii'q$, which accords with the value $\mathtt{M} = \frac{1}{2}ii'p$ which we have already found for this case, because then q becomes the perpendicular which we have designated by p. If one assumes a infinite, $\mathtt{M}$ becomes null, as it should be, so that there results

$$a\arctan\frac{q}{a} = q.$$

If one names z the angle of which the tangent is

$$\frac{ss'}{a\sqrt{a^2+s^2+s'^2}},$$

it follows

$$\mathtt{M} = \frac{1}{2}ii'q\Big(1 - \frac{z}{\tan z}\Big);$$

this is the value of the rotational moment which is produced by a force equal to

$$\frac{1}{2}ii'\Big(1 - \frac{z}{\tan z}\Big),$$

acting along the line which joins the two extremities of the conductors opposed to those where they are met by the line which measures the shortest distance.

It is sufficient to quadruple these expressions to have the rotational moment produced by the mutual action of two conductors such that one is mobile about the line which measures their shortest distance, in the case where this line touches the two conductors at their center, and where their lengths are respectively represented by $2s$ and $2s'$.

It is, for the rest, easy to see that if, instead of assuming that the two currents start from the point where they encounter the line, one had made the calculation for arbitrary limits, one should obtain a value of M composed of four terms of the form of those that we obtained in this particular case, two of these terms are positive and the two others are negative.

Consider now two rectilinear currents A′S′,L′L″ (Pl. 2 pg. 114, fig. 27 pg. 126), not situated in the same plane and whose directions form a right angle.

Let A′A be their joint perpendicular, and find the action of L′L″ which turns A′S′ about a parallel OV at L′L″ carried out at the distance A′O = b from A.

For M,M′ two arbitrary elements of these currents; the general expression for the component of their action parallel with the joint perpendicular AA′, becomes, by making, $\epsilon = \frac{\pi}{2}$,

$$\frac{1}{2}aii'\frac{\mathrm{d}^2\frac{1}{r}}{\mathrm{d}s\mathrm{d}s'}\mathrm{d}s\mathrm{d}s';$$

its moment in relation to the point O is therefore, by taking A′ as the origin of the s', equal to

$$\frac{1}{2}aii'(s'-b)\frac{\mathrm{d}^2\frac{1}{r}}{\mathrm{d}s\mathrm{d}s'}\mathrm{d}s\mathrm{d}s';$$

by integrating with respect to s, it becomes

$$\frac{1}{2}aii'(s'-b)\frac{\mathrm{d}\frac{1}{r}}{\mathrm{d}s'}\mathrm{d}s';$$

and naming r' and r'' the distances M′L′,M′L″ of M′ to the points L′,L″, and integrate between these limits the action of L′L″, to cause turning of the element M′, is

$$\frac{1}{2}aii'(s'-b)\mathrm{d}s'\left(\frac{\mathrm{d}\frac{1}{r''}}{\mathrm{d}s'}-\frac{dr\frac{1}{r'}}{\mathrm{d}s'}\right),$$

expression which must be integrated with respect to s'. Or

$$\frac{1}{2}aii'\int(s'-b)\mathrm{d}\frac{1}{r''}=\frac{1}{2}aii'\left(\frac{s'-b}{r''}-\int\frac{\mathrm{d}s'}{r''}\right),$$

and it is also easy to see that in naming c the value AL″ of s which corresponds to r'', and which is a constant in the actual integration, one has $\mathrm{A'L''}=\sqrt{a^2+c^2}$, from which it follows that

$$r''=\frac{\sqrt{a^2+c^2}}{\sin\beta''},\quad s'=-\sqrt{a^2+c^2}\cot\beta'',\quad \mathrm{d}s'=\frac{\sqrt{a^2+c^2}}{\sin^2\beta''}\mathrm{d}\beta'';$$

therefore

$$\int\frac{\mathrm{d}s'}{r''}=\int\frac{\mathrm{d}\beta''}{\sin\beta''}=\ln\frac{\tan\frac{1}{2}\beta''_2}{\tan\frac{1}{2}\beta''_1};$$

the second term integrates in the same manner, and one obtains finally for the rotational moment to be found

$$\frac{1}{2}aii'\left(\frac{s'_2-b}{r''_2}-\frac{s'_1-b}{r''_1}-\frac{s'_2-b}{r'_2}+\frac{s'_1-b}{r'_1}-\ln\frac{\tan\frac{1}{2}\beta''_2\tan\frac{1}{2}\beta'_1}{\tan\frac{1}{2}\beta''_1\tan\frac{1}{2}\beta'_2}\right).$$

In the case where the axis of rotation parallel to the line $\mathtt{L'L''}$ or s passes by the point of intersection $\mathtt{A'}$ of the lines a and s', one has $b=0$; and if one assumes, furthermore, that the current which flows in s' parts at this point of intersection, one obtains in addition

$$s'_1=0,\ \ \beta'_1=\frac{\pi}{2},\ \ \beta''_1=\frac{\pi}{2},$$

so that the value of the rotational moment reduces to

$$\frac{1}{2}aii'\left(\frac{s'_2}{r''_2}-\frac{s'_2}{r'_2}-\ln\frac{\tan\frac{\pi}{2}\beta''_2}{\tan\frac{\pi}{2}\beta'_2}\right).$$

I will now search for the action of a conducting wire folded following the perimeter of a rectangle $\mathtt{K'K''L''L'}$ for turning a rectilinear conductor $\mathtt{A'S'}=s'_2$, perpendicular on the plane of this rectangle, and mobile about one of its sides $\mathtt{K'K''}$ that it meets at the point $\mathtt{A'}$: the moment produced by the action of the side $\mathtt{K'K''}$ being then obviously null, it will be necessarily be the one that is acted on by the action of $\mathtt{L'L''}$ and thus we come to calculate the value, adding the moment produced by $\mathtt{K'L'}$ in the same direction as that of $\mathtt{L'L''}$, and by subtracting the one that is by $\mathtt{K'L''}$ whose action tends to cause the turning of $\mathtt{A'S'}$ in a contrary direction; or, following the preceding calculations, by naming g and h the shortest distances $\mathtt{A'K'}$,$\mathtt{A'K''}$, from $\mathtt{AS'}$ to the lines $\mathtt{K'L'}$,$\mathtt{K''L''}$ which are both equal to a, one has for the absolute values of these moments

$$\frac{1}{2}ii'\left(q'-g\arctan\frac{q'}{g}\right),\ \ \frac{1}{2}ii'\left(q''-h\arctan\frac{q''}{h}\right),$$

by setting

$$q'=\frac{as'_2}{\sqrt{g^2+a^2+s'^2}}=\frac{as'_2}{r'_2},\qquad q''=\frac{as'_2}{\sqrt{h^2+a^2+s'^2}}=\frac{as'_2}{r''_2},$$

that of the total moment is then

$$\frac{1}{2}ii'\left(h\arctan\frac{q''}{h}-g\arctan\frac{q'}{g}-a\ln\frac{\tan\frac{1}{2}\beta''_2}{\tan\frac{1}{2}\beta'_2}\right).$$

Such is the value of the rotational moment resulting from the action of a conductor having as its form the perimeter of a rectangle, and acting on a mobile conductor at one of the sides of the rectangle, which will also be its distance to the other sides of the rectangle and its dimensions. By determining by experiment the instant at which the mobile conductor is in equilibrium with respect to the opposing actions of two rectangles situated in the same plane, but of various sizes and at various distances from the mobile conductor, one has a quite simple means to obtain some verifications of my formula which are susceptible of great precision; it is this that one can carry out easily with the aid of an instrument of which it is too easy to conceive the construction for it to be necessary to explain it here.

Integrate now the expression $\int\int \frac{\mathrm{d}s\mathrm{d}s'}{r^3}$ in the extent of two rectilinear currents not situated in the same plane, and making between them an arbitrary angle ϵ, in the case where these currents start at the common perpendicular; the other cases can be deduced immediately.

Let A (Pl. 2 pg. 114, fig. 28 pg. 127) be the point where the common perpendicular meets the direction AM of the current s, AM′ a parallel conducted by this point to the current s', and mm' the projection on the plane MAM′ of the line which joins the two elements $\mathrm{d}s$, $\mathrm{d}s'$.

Draw by A a line An parallel and equal to mm', and form in n a small parallelogram nn' having its sides parallel to the lines MAN, AM′, and equal to $\mathrm{d}s$, $\mathrm{d}s'$.

If one repeats the same construction for all the elements, the parallelograms so formed will compose the entire parallelogram NAM′D, and, their surfaces having for their extent $\mathrm{d}s\mathrm{d}s'\sin\epsilon$, one obtains the proposed integral multiplied by $\sin\epsilon$, in searching for the volume having as its base NAM′D, and terminated on the surface whose ordinates elevated to various points of this base have for value $\frac{1}{r^3}$; r being the distance of the two elements of currents, which correspond, after our construction, to all their points of the surface NAM′D.

Now, to calculate this volume, we can partition the base into triangles having for common top the point A.

Let Ap a line connected to any of the points of the surface of the triangle AND, and $pqq'p'$ the surface included between the two infinitely close lines Ap, Aq' and the two arcs of a circle described by A with the radii A$p = u$ and A$p' = u + \mathrm{d}u$: we will, because the angle NAM′ $= \pi - \epsilon$ and by naming φ the angle NAp, have

$$\sin\epsilon \int\int \frac{\mathrm{d}s\mathrm{d}s'}{r^3} = \int\int \frac{u\mathrm{d}u\mathrm{d}\varphi}{r^3}.$$

Now, if a designates the perpendicular common to the directions of the two conductors, and s and s' the distances counted in A on the two currents, one has

$$r = \sqrt{a^2 + u^2}, \qquad u = \sqrt{s^2 + s'^2 - 2ss'\cos\epsilon}\ :$$

therefore, by integrating first from $u = 0$ up to $u =$ AR $= u_1$,

$$\sin\epsilon \int\int \frac{\mathrm{d}s\mathrm{d}s'}{r^3} = \int\int \frac{u\mathrm{d}u\mathrm{d}\varphi}{(a^2+u^2)^{\frac{3}{2}}} = \int \mathrm{d}\varphi\left(\frac{1}{a} - \frac{1}{\sqrt{a^2+u_1^2}}\right).$$

It remains to integrate this last expression with respect to φ : for this we will calculate u_1, as a function of φ by the proportion AN : AR :: $\sin(\varphi+\epsilon) : \sin\epsilon$, or $s : u_1 :: \sin(\varphi+\epsilon) : \sin\epsilon$; and by substituting in $a^2 + u_1^2$, the value taken from this proportion, we will have to calculate

$$\begin{aligned}\int \mathrm{d}\varphi\left[\frac{1}{a} - \frac{1}{\sqrt{a^2 + \frac{s^2\sin^2\epsilon}{\sin^2(\varphi+\epsilon)}}}\right] &= \frac{\varphi}{a} - \int \frac{\mathrm{d}\varphi\sin(\varphi+\epsilon)}{\sqrt{s^2\sin^2\epsilon + a^2\sin^2(\varphi+\epsilon)}} \\ &= \frac{\varphi}{a} + \frac{1}{a}\int \frac{\mathrm{d}\cos(\varphi+\epsilon)}{\sqrt{\frac{a^2+s^2\sin^2\epsilon}{a^2} - \cos^2(\varphi+\epsilon)}} \\ &= \frac{1}{a}\left[\varphi + \arcsin\frac{a\cos(\varphi+\epsilon)}{\sqrt{a^2+s^2\sin^2\epsilon}} + \mathrm{C}\right].\end{aligned}$$

Name μ and μ' the angles $\mathtt{NAD}$,$\mathtt{M'AD}$, and take the preceding integral between $\varphi = 0$ and $\varphi = \mu$, it then becomes

$$\frac{1}{a}\left[\mu + \arcsin\frac{a\cos(\mu+\epsilon)}{\sqrt{a^2+s^2\sin^2\epsilon}} - \arcsin\frac{a\cos\epsilon}{\sqrt{a^2+s^2\sin^2\epsilon}}\right],$$

and, since $\mu + \epsilon = \pi - \mu'$, it changes to

$$\frac{1}{a}\left[\mu - \arcsin\frac{a\cos(\mu')}{\sqrt{a^2+s^2\sin^2\epsilon}} - \arcsin\frac{a\cos\epsilon}{\sqrt{a^2+s^2\sin^2\epsilon}}\right],$$

or

$$\cos\mu' = \frac{\mathtt{AK}}{\mathtt{AD}} = \frac{s' - s\cos\epsilon}{\sqrt{(s'-s\cos\epsilon)^2 + s^2\sin^2\epsilon}} = \frac{s'-s\cos\epsilon}{\sqrt{s^2+s'^2-2ss'\cos\epsilon}},$$

from which one extracts for the integral the following expression :

$$\frac{1}{a}\left[\mu - \arcsin\frac{a(s'-s\cos\epsilon)}{\sqrt{a^2+s^2\sin^2\epsilon}\sqrt{s^2+s'^2-2ss'\cos\epsilon}} - \arcsin\frac{a\cos\epsilon}{\sqrt{a^2+s^2\sin^2\epsilon}}\right],$$

where, in changing from sin to tangent for the two arcs,

$$\frac{1}{a}\left[\mu - \arctan\frac{a(s'-s\cos\epsilon)}{s\sin\epsilon\sqrt{a^2+s^2+s'^2-2ss'\cos\epsilon}} - \arctan\frac{a\cot\epsilon}{\sqrt{a^2+s^2}}\right],$$

and since one finds the integral relative to the triangle $\mathtt{M'AD}$ in changing in this expression μ to μ' and s to s', one has for the total integral, because $\mu + \mu' = \pi - \epsilon$,

$$\frac{1}{a}\left(\pi - \epsilon - \arctan\frac{a(s'-s\cos\epsilon)}{s\sin\epsilon\sqrt{a^2+s^2+s'^2-2ss'\cos\epsilon}} - \arctan\frac{a\cot\epsilon}{\sqrt{a^2+s^2}}\right.$$
$$\left. - \arctan\frac{a(s-s'\cos\epsilon)}{s'\sin\epsilon\sqrt{a^2+s^2+s'^2-2ss'\cos\epsilon}} - \arctan\frac{a\cot\epsilon}{\sqrt{a^2+s'^2}}\right).$$

In calculating the tangent of the sum of the two arcs whose values contain s and s', one changes this expression to

$$\frac{1}{a}\left(\pi - \epsilon - \arctan\frac{a\sin\epsilon\sqrt{a^2+s^2+s'^2-2ss'\cos\epsilon}}{ss'\sin^2\epsilon + a^2\cos\epsilon}\right.$$
$$\left. - \arctan\frac{a\cot\epsilon}{\sqrt{a^2+s^2}} - \arctan\frac{a\cot\epsilon}{\sqrt{a^2+s'^2}}\right);$$

and since

$$\frac{\pi}{2} - \arctan\frac{a\sin\epsilon\sqrt{a^2+s^2+s'^2-2ss'\cos\epsilon}}{ss'\sin^2\epsilon + a^2\cos\epsilon}$$
$$= \arctan\frac{ss'\sin^2\epsilon + a^2\cos\epsilon}{a\sin\epsilon\sqrt{a^2+s^2+s'^2-2ss'\cos\epsilon}}$$

one has, by dividing by $\sin\epsilon$,

$$\int\int \frac{\mathrm{d}s\mathrm{d}s'}{r^3} = \frac{1}{a\sin\epsilon}\left(\arctan\frac{ss'\sin^2\epsilon + a^2\cos\epsilon}{a\sin\epsilon\sqrt{a^2+s^2+s'^2-2ss'\cos\epsilon}} - \arctan\frac{a\cot\epsilon}{\sqrt{a^2+s^2}} - \arctan\frac{a\cot\epsilon}{\sqrt{a^2+s'^2}} + \frac{\pi}{2} - \epsilon\right);$$

expression which, since one assumes that $\epsilon = \frac{\pi}{2}$, reduces to

$$\frac{1}{a}\left(\arctan\frac{ss'}{a\sqrt{a^2+s^2+s'^2}}\right),$$

as we have found previously.

One can remark that the first term of the value that we have found in the general case is the indefinite integral of

$$\frac{\mathrm{d}s\mathrm{d}s'}{(a^2+s^2+s'^2-2ss'\cos\epsilon)^{\frac{3}{2}}},$$

as one can verify by differentiation, and that the three others obtain by application successively into this indefinite integral :

$$1^\circ\ s'=0;\quad 2^\circ\ s=0;\quad 3^\circ\ s'=0\ \text{ and }\ s=0.$$

If the currents do not leave the common perpendicular, one will obtain an integral still composed of four terms which will all be of the same form as the indefinite integral.

15. Action exerted on an element of a wire conductor by an assembly of closed circuits of very small dimensions, which have been designated by the name electrodynamic solenoid

Until now we have considered the mutual action of currents in the same plane and rectilinear currents situated arbitrarily in space; it still remains to consider the mutual action of curvilinear currents which are not in the same plane. First we shall assume that these currents describe planar and closed curves with all their dimensions infinitesimal. As we have seen, the action of a current of this kind depends on the three integrals $\mathtt{A},\mathtt{B},\mathtt{C}$, whose values are

$$\mathtt{A} = \lambda\left(\frac{\cos\xi}{l^3} - \frac{3qx}{l^5}\right),$$

$$\mathtt{B} = \lambda\left(\frac{\cos\eta}{l^3} - \frac{3qy}{l^5}\right),$$

$$\mathtt{C} = \lambda\left(\frac{\cos\zeta}{l^3} - \frac{3qz}{l^5}\right).$$

Now imagine any line in the space $\mathtt{M}m\mathtt{O}$ (Pl. 2 pg. 114, fig. 29 pg. 127), which the electric currents encircle forming very small circuits closed around this line, in infinitely close planes which are perpendicular to this line, such that the areas occupied by these circuits are all equal to each other and represented by λ, that their centers of gravity are on $\mathtt{M}m\mathtt{O}$, and

that these planes have the same distance, measured along this line, between two consecutive planes. Putting g for the infinitesimal distance between neighboring planes, the number of currents found to correspond to an element $\mathrm{d}s$ of the line $\mathtt{M}m\mathtt{O}$ will be $\frac{\mathrm{d}s}{g}$; and it is necessary to multiply by this number the values of $\mathtt{A},\mathtt{B},\mathtt{C}$ which have just been found for a single circuit so as to obtain the values which refer to the circuits of the element $\mathrm{d}s$; by integrating over the arcs from one extremity $\mathtt{L}'$ of the arc s, to the other extremity $\mathtt{L}''$ of this arc, one obtains the values of $\mathtt{A},\mathtt{B},\mathtt{C}$ relative to the assembly of all circuits which encircle it, an assembly which I have called an *electrodynamic solenoid,* from the Greek word $\sigma\omega\lambda\eta\nu o\epsilon\iota\delta\grave{\eta}\varsigma$, which means that which forms a canal, that is to say the surface of this form on which are located all the circuits.

Thus, for the entire solenoid,

$$\mathtt{A} = \frac{\lambda}{g}\int\left(\frac{\cos\xi\,\mathrm{d}s}{l^3} - \frac{3qx\,\mathrm{d}s}{l^5}\right),$$

$$\mathtt{B} = \frac{\lambda}{g}\int\left(\frac{\cos\eta\,\mathrm{d}s}{l^3} - \frac{3qy\,\mathrm{d}s}{l^5}\right),$$

$$\mathtt{C} = \frac{\lambda}{g}\int\left(\frac{\cos\zeta\,\mathrm{d}s}{l^3} - \frac{3qz\,\mathrm{d}s}{l^5}\right).$$

Now, since the direction of line g which is perpendicular to the plane of λ, is parallel to the tangent to the curve s, it follows that

$$\cos\xi = \frac{\mathrm{d}x}{\mathrm{d}s},\quad \cos\eta = \frac{\mathrm{d}y}{\mathrm{d}s},\quad \cos\zeta = \frac{\mathrm{d}z}{\mathrm{d}s}.$$

Moreover, q is evidently equal to the sum of the projections of the three coordinates x, y, z on its direction; thus

$$q = \frac{x\,\mathrm{d}x + y\,\mathrm{d}y + z\,\mathrm{d}z}{\mathrm{d}s} = \frac{l\,\mathrm{d}l}{\mathrm{d}s},$$

since $l^2 = x^2 + y^2 + z^2$. Substituting these values into the expression which has just been found for $\mathtt{C}$, it becomes

$$\mathtt{C} = \frac{\lambda}{g}\int\left(\frac{\mathrm{d}s}{l^3} - \frac{3z\,\mathrm{d}l}{l^4}\right) = \frac{\lambda}{g}\left(\frac{z}{l^3} + \mathtt{C}'\right).$$

Putting x', y', z', l' and x'', y'', z'', l'' for the respective values of x, y, z, l at the two extremities $\mathtt{L}', \mathtt{L}''$ of the solenoid, we have

$$C = \frac{\lambda}{g}\left(\frac{z''}{l''^3} - \frac{z'}{l'^3}\right).$$

Likewise, finding similar expressions for the two other integrals $\mathtt{A},\mathtt{B}$, the values for the three quantities which it is proposed to calculate for the entire solenoid are:

$$\mathtt{A} = \frac{\lambda}{g}\left(\frac{x''}{l''^3} - \frac{x'}{l'^3}\right),$$

$$\mathtt{B} = \frac{\lambda}{g}\left(\frac{y''}{l''^3} - \frac{y'}{l'^3}\right),$$

$$\mathtt{C} = \frac{\lambda}{g}\left(\frac{z''}{l''^3} - \frac{z'}{l'^3}\right).$$

For a solenoid with a closed curve as its directrix, one has $x'' = x'$, $y'' = y'$, $z'' = z'$, $l'' = l'$, and therefore $\mathtt{A} = 0$, $\mathtt{B} = 0$, $\mathtt{C} = 0$; if it did extend to infinity in both directions, all the terms of the values of $\mathtt{A},\mathtt{B},\mathtt{C}$ will be zero separately, and it is evident that in these two cases the constant of integration and the expression on the left hand side of the equation. The two are, of course, not the same action exerted by the solenoid will be reduced to zero. Assuming that it only extends to infinity on one side, which I shall indicate by referring to it as a semi-infinite solenoid, it is only necessary to consider the extremity with coordinates x', y', z' of finite value, because the other extremity is assumed to be infinitely remote and the first terms of the values which have just been found for $\mathtt{A},\mathtt{B},\mathtt{C}$ are necessarily zero; thus

$$\mathtt{A} = -\frac{\lambda x'}{g l'^3}, \quad \mathtt{B} = -\frac{\lambda y'}{g l'^3}, \quad \mathtt{C} = -\frac{\lambda z'}{g l'^3},$$

and therefore $\mathtt{A} : \mathtt{B} : \mathtt{C} :: x' : y' : z'$; hence the normal to the directing plane which passes through the origin and forms angles to the axes with cosines

$$\frac{\mathrm{A}}{\mathrm{D}}, \frac{\mathrm{B}}{\mathrm{D}}, \frac{\mathrm{C}}{\mathrm{D}}$$

where $\mathtt{D} = \sqrt{\mathrm{A}^2 + \mathrm{B}^2 + \mathrm{C}^2}$, also passes through the extremity of the solenoid with the coordinates x', y', z'.

As we have seen, in the general case, the total resultant is perpendicular to this normal; thus the action of an indefinite solenoid on an element is perpendicular to the straight line joining the midpoint of this element to the extremity of the solenoid; and since it is likewise perpendicular to the element, it follows that it is also perpendicular to the plane drawn through this element and through the extremity of the solenoid.

Its direction being determined, it only remains to find its value; now, according to the analysis for the general case, this value is

$$-\frac{\mathtt{D}\, ii'\, \mathrm{d}s' \sin\epsilon'}{2},$$

where ϵ is the angle between the element $\mathrm{d}s'$ and the normal to the directing plane; and since $\mathtt{D} = \sqrt{\mathrm{A}^2 + \mathrm{B}^2 + \mathrm{C}^2}$, it is easily found that

$$\mathtt{D} = -\frac{\lambda}{g\, l'^2},$$

which gives for the value of the resultant

$$\frac{\lambda ii' \mathrm{d}s' \sin\epsilon'}{2gl'^2}.$$

It is therefore seen that the action exerted by an indefinite solenoid with its extremity at $\mathtt{L}'$ (Pl. 2 pg. 114, fig. 29 pg. 127) on the element ab is normal at $\mathtt{A}$ to the plane $b\,\mathtt{A}\,\mathtt{L}'$, proportional to the sine of the angle of $b\,\mathtt{A}\,\mathtt{L}'$, and is inversely proportional to the square of the distance $\mathtt{A}\mathtt{L}'$, and it always remains the same, whatever the shape and direction of

the indefinite curve $\mathtt{L'L''}$ on which all the centers of gravity of the currents composing the indefinite solenoid are assumed to lie.

If it should be desired to consider a definite solenoid with its two extremities situated at two given points $\mathtt{L'}$,$\mathtt{L''}$, it is sufficient to assume a second indefinite solenoid commencing at the point $\mathtt{L''}$ of the first and coinciding with it from this point to infinity, with currents opposite in direction, but equal in intensity, the action of the latter being opposite in sign to that of the first indefinite solenoid from $\mathtt{L'}$, and destroying its action over the part extending from $\mathtt{L''}$ to infinity in the direction $\mathtt{L''O}$ where they are superposed. The action of the solenoid $\mathtt{L'L''}$ will therefore be the same as that which would be exerted by joining the two indefinite solenoids and, in consequence, it consists of the force which has just been calculated and another force which acts in the opposite direction, passing likewise through point $\mathtt{A}$, perpendicular to the plane $b\mathtt{AL''}$, and having for value

$$\frac{\lambda\, ii'\,\mathrm{d}s'\sin\epsilon''}{2gl''^2},$$

where ϵ is the angle $b\mathtt{AL''}$, and l'' is the distance $\mathtt{AL''}$. The total action of the solenoid is the resultant of these two forces and, like them, it passes through point $\mathtt{A}$.

16. Action on a solenoid exerted by an element or by a finite portion of a conducting wire, a closed circuit or a system of closed circuits

Since the action of a definite solenoid can be deduced directly from that of an indefinite solenoid, we shall in all that remains to be said on the subject proceed from the indefinite solenoid. This simplifies the calculations and conclusions can readily be drawn for a definite solenoid.

Let $\mathtt{L'}$ (Pl. 2 pg. 114, fig. 30 pg. 127), be the extremity of an indefinite solenoid, $\mathtt{A}$ the mid-point of an element ba of the current $\mathtt{M_1AM_2}$, and $\mathtt{L'K}$ a fixed straight line through the point $\mathtt{L'}$; we put θ for the variable angle $\mathtt{KL'A}$, μ for the inclination of the planes $b\mathtt{AL'}$, $\mathtt{AL'K}$ to each other, and l' for the distance $\mathtt{L'A}$. Since the action of the element ba on the solenoid is equal and opposite to that which the solenoid exerts on the element, for its determination it is necessary to consider the mid-point of $\mathtt{A}$ which is permanently associated with the solenoid, and which is influenced by a force which, ignoring the sign, may be represented as

$$\frac{\lambda ii'\,\mathrm{d}s'\sin b\mathtt{AL'}}{2gl'^2} \quad \text{where} \quad \frac{\lambda ii'\,\mathrm{d}\nu}{gl'^2},$$

where $\mathrm{d}\nu$ is the area $a\mathtt{L'}b$ equal to

$$\frac{i'\,\mathrm{d}s'\sin b\mathtt{AL'}}{2}.$$

Since this force is normal at $\mathtt{A}$ to the plane $\mathtt{AL'}b$, to obtain its moment about the axis $\mathtt{L'K}$, it is necessary to find the component which is perpendicular to $\mathtt{AL'K}$ and to multiply it by a perpendicular to $\mathtt{AP}$ dropped from point $\mathtt{A}$ on to the straight line $\mathtt{L'K}$. Since μ is the angle between the planes $\mathtt{AL'}b$,$\mathtt{AL'K}$, this component is obtained by multiplying the foregoing expression by $\cos\mu$; but $\mathrm{d}\nu\cos\mu$ is the projection of the area $\mathrm{d}\nu$ on the plane $\mathtt{AL'K}$, whence it follows that in representing this projection by $\mathrm{d}\mu$, the value of the required component is

$$\frac{\lambda ii'\,\mathrm{d}\mu}{gl'^3}.$$

Now, the projection of the angle $a\mathtt{L}'b$ on $\mathtt{AL}'\mathtt{K}$ can be regarded as the infinitesimal difference between the angles $\mathtt{KL}'a$ and $\mathtt{KL}'b$; it is therefore $\mathrm{d}\theta$ and we obtain

$$\mathrm{d}\mu = \frac{l'^2\mathrm{d}\theta}{2};$$

which reduces the previous expression to

$$\frac{\lambda ii'\mathrm{d}\theta}{2gl'};$$

but since $\mathtt{AP} = l'\sin\theta$, for the required moment we have

$$\frac{\lambda ii'}{2g}\sin\theta\mathrm{d}\theta.$$

This expression, integrated over the curve $\mathtt{M}_1\mathtt{AM}_2$, yields the moment of the current making the solenoid revolve about $\mathtt{L}'\mathtt{K}$: now, if the current is closed, the integral, which is in general

$$\mathtt{C} - \frac{\lambda ii'\cos\theta}{2g},$$

vanishes between the limits, and the moment is zero in respect of any straight line $\mathtt{L}'\mathtt{K}$ through the point $\mathtt{L}'$.

Hence, in the action of a closed circuit, or of any system of closed circuits, on an indefinite solenoid, all the forces applied to the various elements of the system produce the same moments about the axis as if they were at the extremity of the solenoid; their resultant passes through this extremity and in no case can the forces tend to impart rotational motion to the solenoid about a straight line through its extremity, which is in agreement with the results of the experiments. If the current represented by the curve $\mathtt{M},\mathtt{AM}$ were not closed, its moment for rotation of the solenoid about $\mathtt{L}'\mathtt{K}$, putting θ'_1 and θ'_2 for the extreme values of θ in respect of point $\mathtt{L}'$ for the extremities $\mathtt{M}_1, \mathtt{M}_2$ of the curve $\mathtt{M}_1\mathtt{AM}_2$, would be

$$\frac{\lambda ii'}{2g}(\cos\theta'_1 - \cos\theta'_2).$$

Consider now the definite solenoid $\mathtt{L}'\mathtt{L}''$ (Pl. 2 pg. 114, fig. 31 pg. 128) which may only revolve about the axis through its two extremities. We shall again be able to replace it by two indefinite solenoids; the sum of the actions of the current $\mathtt{M}_1\mathtt{AM}_2$ on each of them is equivalent to its action on $\mathtt{L}'\mathtt{L}''$. The rotational moment of the first has just been found; putting θ''_1, θ''_2 for the angles corresponding to θ'_1, θ'_2, but in respect of the extremity $\mathtt{L}''$, one obtains for that of the second

$$-\frac{\lambda ii'}{2g}(\cos\theta''_1 - \cos\theta''_2);$$

the total moment produced by the action of $\mathtt{M}_1\mathtt{AM}_2$ for rotation of the solenoid about its axis $\mathtt{L}'\mathtt{L}''$ therefore is

$$\frac{\lambda ii'}{2g}(\cos\theta'_1 - \cos\theta''_1 - \cos\theta'_2 + \cos\theta''_2).$$

This moment is independent of the shape of the conductor $\mathtt{M_1AM_2}$, its magnitude and its distance from the solenoid $\mathtt{L'L''}$, and it remains so as long as any such variation entails no change in the angles $\theta'_1, \theta''_1, \theta'_2, \theta''_2$; it is zero not only when the current $\mathtt{M_1M_2}$ forms a closed circuit, but also when the current is assumed to extend to infinity in both directions, because in that event, the two extremities of the current being infinitely remote from the extremities of the solenoid, the angle θ'_1 becomes equal to θ''_1, and the angle θ'_2 to θ''_2.

All the moments of rotation about straight lines drawn through the extremity of an indefinite solenoid being zero, this extremity is the point at which the resultant of the forces exerted on the solenoid is applied by a closed circuit, or by a system of currents forming more than one closed circuit; it may therefore be assumed that all these forces are transported there and this point may be taken as the origin of coordinates $\mathtt{A}$ (Pl. 2 pg. 114, fig. 32 pg. 128) : suppose that $\mathtt{BM}$ is a portion of one of the currents acting on the solenoid. From the foregoing the force due to some element $\mathtt{M}m$ of $\mathtt{BM}$ is normal to the plane $\mathtt{AM}m$ and represented as

$$\frac{\lambda i i' \mathrm{d}\nu}{g r^3},$$

where $\mathrm{d}v$ is the area $\mathtt{AM}m$ and r is the variable distance $\mathtt{AM}$.

To obtain the component of this action along $\mathtt{AX}$, it has to be multiplied by the cosine of the angle which it forms with $\mathtt{AX}$, which is the same as the angle between the planes $\mathtt{AM}m, \mathtt{ZAY}$; but $\mathrm{d}\nu$, multiplied by this cosine, is the projection of $\mathtt{AM}m$ on $\mathtt{ZAY}$, which is equal to

$$\frac{y\mathrm{d}z - z\mathrm{d}y}{2} :$$

if therefore it is desired to find the action exerted along $\mathtt{AX}$ by currents forming closed circuits, it is necessary to take the following integral over the entire range of the currents

$$\frac{\lambda i i'}{2g} \int \frac{y\mathrm{d}z - r\mathrm{d}y}{r^3} \qquad \text{which is} \qquad \frac{\lambda i i' \mathtt{A}}{2g},$$

the quantity $\mathtt{A}$ being the same as before, where $n+1$ was replaced by its value 3; likewise the action along $\mathtt{AY}$ is

$$\frac{\lambda i i' \mathtt{B}}{2g},$$

and along $\mathtt{AZ}$

$$\frac{\lambda i i' \mathtt{C}}{2g}.$$

The resultant of these three forces, which is the total action exerted by a number of closed circuits on an indefinite solenoid, is therefore equal to

$$\frac{\lambda i i' \mathtt{D}}{2g},$$

where $\mathtt{D} = \sqrt{\mathtt{A}^2 + \mathtt{B}^2 + \mathtt{C}^2}$; and the cosines of the angles which it forms with the x, of y and of z axes are:

$$\frac{\mathtt{A}}{\mathtt{D}}, \frac{\mathtt{B}}{\mathtt{D}}, \frac{\mathtt{C}}{\mathtt{D}},$$

which are the values of the cosines of the angles between the same axes and the normal to the directing plane as if the action of the circuits on an element situated at A were considered. Now this element would be transported by the action of the system in a direction contained within the directing plane; hence the remarkable conclusion is reached that when a system of closed circuits acts alternately on an indefinite solenoid and on an element situated at the extremity of this solenoid, the respective directions in which the element and the extremity of the solenoid are carried, are mutually perpendicular. If the element is itself situated in the directing plane, the action exerted upon it by the system is at its maximum and equal to

$$\frac{ii'\mathtt{D}\mathrm{d}s'}{2}.$$

The action which this system exerts on the solenoid was found just now to be

$$\frac{\lambda ii'\mathtt{D}}{2g}:$$

these two forces are therefore always in a constant ratio for a particular element and a particular solenoid which is equal to

$$\mathrm{d}s' : \frac{\lambda}{g};$$

that is to say, the forces are in the same relation as the length of the element bears to the area of the closed curve described by one of the currents of the solenoid divided by the distance between two consecutive currents; this ratio is independent of the form and magnitude of the currents of the system acting on the element and solenoid.

17. Interaction of two soleniods

Where the system of closed circuits is itself an indefinite solenoid, the normal to the directing plane through point A is, as we have just seen; a straight line joining point A to the extremity of the solenoid; hence the mutual action of two indefinite solenoids takes place among the straight line joining the extremity of one solenoid to the extremity of the other; in order to determine its value, we put λ' for the area of the circuits formed by the currents of this new solenoid, g' for the distance between the planes of two of these consecutive circuits, l for the distance between the extremities of the two indefinite solenoids, and we get $\mathtt{D} = -\frac{\lambda'}{g'l^2}$, which yields for their interaction

$$\frac{\lambda ii'\mathtt{D}}{2g} = -\frac{\lambda\lambda'\, ii'}{2gg'l^2},$$

which is inversely proportional to the square of the distance l. When one of the solenoids is definite, it can be replaced by two indefinite solenoids and the action is then made up of two forces, one attractive and the other repellent, along the straight lines which join the two extremities of the first solenoid to the extremity of the other. Finally, if two definite solenoids $\mathtt{L}'\mathtt{L}'', \mathtt{L}_1, \mathtt{L}_2$ (Pl. 2 pg. 114, fig. 33 pg. 128) interact with each other, there are four forces along the respective straight lines $\mathtt{L}'\mathtt{L}_1, \mathtt{L}'\mathtt{L}_2, \mathtt{L}''\mathtt{L}_1, \mathtt{L}''\mathtt{L}_2$ which join the extremities in pairs; and if, for example, there is repulsion along $\mathtt{L}'\mathtt{L}_1$, there will be attraction along $\mathtt{L}'\mathtt{L}_2$, and repulsion along $\mathtt{L}''\mathtt{L}_2$.

In order to justify the manner in which I have conceived magnetic phenomena, regarding magnets as assemblies of electric currents forming minute circuits round their particles, it should be shown from consideration of the formula by which I have represented the interaction of two elements of current, that certain assemblies of little circuits result in forces which depend solely on the situation of two determinate points of this system. These are endowed with all the properties of the: forces which may be attributed to what are called molecules of austral fluid and of boreal fluid, whenever these two fluids are used to explain magnetic phenomena, whether in the mutual action of magnets, or in the action of a magnet on a conductor. Now the physicists who prefer explanations based on the existence of such molecules to the explanation which I have deduced from the properties of electric currents, are known to admit that each molecule of austral fluid always has a corresponding molecule of boreal fluid of the same intensity in each particle of the magnetized body. In saying that the assembly of these two molecules, which may be regarded as the two poles of the element, is a magnetic element, an explanation of the phenomena associated with the two kinds of action in question requires: 1° that the mutual action of magnetic elements should be made up of four forces, two attractive and two repellent, acting along straight lines joining the two molecules of one of these elements to the two molecules of the other, with intensity is inversely proportional to the squares of these lines; 2° that when one of these elements acts on an infinitesimal portion of conducting wire, two forces result, perpendicular to the planes passing through the two molecules of the element and the small portion of wire, and proportional to the sines of the angles between the wire and the straight lines joining the wire to the two molecules, and which are inversely proportional to the squares of these distances. So long as my concept of the behavior of a magnet is disputed and so long as the two types of force are attributed to molecules of austral and boreal fluid, it will be impossible to reduce them to a single principle; yet no sooner than my way of looking at the constitution of magnets is adopted, it is seen from the foregoing calculations that the actions of these two kinds and the values of the resulting forces are deducible directly from my formula. To determine their values it is sufficient to replace the assembly of two molecules, the one of austral and the other of boreal fluid, by a solenoid with extremities that are the two determinate points on which the forces in question depend, and which are situated at precisely the same points where it is assumed that the molecules of the two fluids are placed.

18. Identity of solenoids and magnets when the effect on them is from conducting wires, or by other solenoids or other magnets. Discussion of the consequences that can be drawn from this identity, relative to the nature of magnets and of the action that one observes between the earth and a magnet or a conducting wire

From the above, two systems of very small solenoids act on each other, according to my formula, like two magnets composed of as many magnetic elements as there are assumed to be solenoids in the two systems. One of these systems will also act on an element of electric current in the same way as a magnet. In consequence, in as much as all calculations and explanations are based either on the attractive and repellent forces of the molecules in inverse proportion to the squares of the distances, or on the rotational forces between a molecule and an element of electric current, the law governing which I have just indicated as accepted by physicists who do not accept my theory, they are necessarily the same

whether the magnetic phenomena in these two cases is explained in my way by electric currents, or whether the hypothesis of two fluids is preferred. Objections to my theory, or proofs in its favor, therefore, are not to be found in such calculations or explanations. The demonstration on which I rely results above all from the fact that my theory explains in a single principle three sorts of actions that all the associated phenomena prove are due to one common cause, and this cannot be done otherwise. In Sweden, Germany and England it has been thought possible to explain the phenomena by the interaction of two magnets as determined by Coulomb. Our experiments involving continuous rotational motion are manifestly at variance with this idea. In France, those who have not adopted my theory, are obliged to regard the three kinds of action which I have brought under one law, as though absolutely independent. It should be remarked, in this context, that one can deduce from the law proposed by M. Biot for the interaction of an element of a conducting wire and that of what he termed a "magnetic molecule," the law that Coulomb established for the action of two magnets if one accepts that one of these magnets is composed of small electric currents, like those which I have suggested; but then how can it be objected that the other is not likewise composed, thereby accepting all of my point of view?

Moreover, though M. Biot determined the value and direction of the force when an element of conducting wire acts on each particle of a magnet and defined this as the elementary force(1), it is clear that a force cannot be regarded as truly elementary which manifests itself in the action of two elements which are not of the same nature, or which does not act along the straight line which joins the two points between which it is exerted. In the Treatise which this gifted physicist communicated to the Académie on 30 October and 18 December 1820(2), he regarded the force which an element of conducting wire exerts on a molecule of austral or boreal fluid as elementary, that is to say, the action exerted on the

(1) Précis élémentaire de physique, vol. II, p. 122, 2nd edn.

(2) Since the latter Treatise has not been published separately, the formula for the force is only known to me from the following passage in the second edition of Précis élémentaire de physique expérimentale, vol. II, pp. 122–3.

> ≪By imagining the length of the connecting wire Z′C′ (fig. 34) to be divided into infinitely many very fine sections, it is seen that each section must act on the needle with a different energy according to its distance and direction. Now, these elementary forces are just the simple result which it is especially important to know; for the total force exerted by the complete wire is nothing other than the sum of their individual actions. However, calculation is sufficient to analyze from the resultant the simple action. This is what Laplace did. He deduced from our observations that the individual law of the elementary forces exerted by each section of the connecting wire was inversely proportional to the square of the distance, that is to say, it is precisely the same as what is known to exist in ordinary magnetic actions. The analysis showed that to complete our knowledge of the force, it remained to determine whether the action of each section of the force was the same in all directions at the same distance, or whether the energy was greater in some directions than in others. To decide this question, in the vertical plane I bent a long copper wire ZMC at M (fig. 34), in such a way that the two arms ZM,MC were at the same angle of the horizontal MH. In front of this wire I stretched another piece Z′M′C′ of the same material, the same in diameter and of the same grade; this piece I set up vertically, being separated from the first piece at MM only by a strip of very fine paper. I then suspended the magnetized needle AB in front of

pole of a magnetic element, and he considers the mutual action of two elements of voltaic conductors as a composed phenomenon. But, one can easily conceive that if in effect there exist magnetic particles, their mutual action can be considered as the elementary force : this was the point of view of the Swedish and German physicists, that could not support the fact of experiments, because this force being proportional to a function of the distance, it could never give rise to a motion always accelerating in the same direction, even though, as they supposed, the magnetic molecules are considered fixed at determinate points of the conducting wires which they view as assemblies of small magnets, and therefore the two other types of actions would be composed phenomena, since the voltaic element is also. One can equally conceive that this is the mutual action of two conducting wire elements which offer the elementary force : then the mutual action of two magnetic elements, and in which one of these elements acts on a infinitely small portion of the voltaic conductor, then these actions are composed, since the magnetic element should, in this case, be considered as composed. But how can it be conceived that the elementary force is that which is manifested between a magnetic element and an infinitely small voltaic conductor, in other words between two bodies actually of a small volume, but such that one is necessarily composed, regardless of the two ways of interpreting the phenomena that we have just discussed?

The circumstance which presents the force exerted by an element of a conducting wire on a pole of a magnetic element, acting in a perpendicular direction to the line which joins the two points between which the force is determined, while the mutual action of two conducting elements follows the line which joins them, is not a proof less convincing than the one that the first of these two forces is a composed phenomenon. In any case when two

---

this system at the height of the points M,M′ and observed the oscillations at various distances whilst passing current successively through the bent and straight wires. In this way I found that the action was reciprocal for both wires to the distance to the points M,M′; but the absolute intensity was weaker for the oblique wire than for the straight wire in the same proportion that the angle ZMH is to unity. An analysis of this result appears to indicate that the action of each element μ of the oblique wire on each molecule m of austral or boreal magnetism is reciprocal to the square of its distance μm to this molecule and proportional to the sine of the angle $m\mu$M between the distance μm and length of the wire.≫

It is remarkable that this law, which is a corollary of the formula by which I have represented the interaction of two elements of conducting wires when, according to my theory, each magnetic element is replaced by a very small electrodynamic solenoid, was first found through a mathematical error; indeed, for the law to be valid, the absolute intensity ought to have been proportional, not to the angle ZMH, but to the tangent of half this angle, as demonstrated later by M. Savary in his dissertation at the Académie, 3 February 1823, and which has meanwhile been published in the *Journal de physique*, vol. XCVI, pp. 1–25 cont'd. It appears that M. Biot later discovered the error himself, for in the third edition which has just appeared, he describes, without reference to the Treatise where it had first been corrected, new experiments where the intensity of the total force is, in accordance with the calculation of M. Savary, proportional to the tangent of half the angle ZMH, and he concludes therefrom, with more reason than he had with his first experiments, that the force which he calls elementary, is proportional for equal distance to the sine of the angle between the direction of the element of conducting wire and the direction of the straight line joining its mid-point to the magnetic molecule. (*Précis élémentaire de physique expérimentale*, 3rd edn., vol. II, pp. 740–745.)

points act on one another, whether due to an inherent force, or due to which comes from some other cause, whether a chemical phenomenon, a decomposition or recomposition of neutral fluid, resulting in reunion of the two currents, one cannot conceive this force other than as a tendency of these two points to move closer or farther one from the other following the law which joins them, with speeds reciprocally proportional to their masses, and this in spite of the fact that force does not transmit material from one to the other particle by means of an interposed fluid, since the mass of a bullet is not carried in advance at a certain speed, by the air resistance clear of the powder, as the cannon mass is carried backwards according to the same line, passing through the centers of inertia of the bullet and cannon, with a speed which is relative to that of the bullet, as its mass is to the mass of the cannon.

This is a necessary result of the inertia of matter which Newton showed to be one of the principal foundations of the physical theory of the universe, in the last of the three axioms that he gave at the beginning of the *Philosophiæ naturalis principia mathematica*, by stating that the action is always equal and opposite to the reaction; since two forces which impart to two masses speeds inverse to the masses, are the forces that would produce equal pressure against an invincible obstacle with respect to which they move; in other words of equal forces. In order for this principle to be applicable in the case of mutual action of two material particles which are traversed by an electrical current, while one assumes this action by an elastic fluid which fills the space, and such that the vibrations are light(1), it must be admitted that this fluid has no appreciable inertia, as air with respect to the bullet and the cannon; but it is this that one cannot doubt, since it does not oppose any resistance to motion of the planets. The phenomenon of the rotation of an electric mill has led many physicists to admit an appreciable inertia in the two electrical fluids, and as a consequence in what results from their combination; but this supposition is in conflict with all that we otherwise know of these fluids, and with the fact that the planetary motions show no resistance due to the ether; there is not otherwise any motive to admit, since I have shown that the rotation of an electric mill is due to an electrodynamic repulsion produced between the point of the mill and the ambient air particles, by the electrical current which escapes from this point(2).

When M. Ørsted discovered the action which a conductor exerts on a magnet, it really ought to have been suspected that there could be interaction between two conductors; but this was in no way a necessary corollary of the discovery of this famous physicist. A bar of soft iron acts on a magnetized needle, but there is no interaction between two bars of soft iron. Inasmuch as it was only known that a conductor deflects a magnetized needle, could it have been concluded that electric current imparts to wire the property to be influenced by a needle in the same way as soft iron is so influenced without requiring interaction between two conductors when they are beyond the influence of a magnetized body? Only experiments could decide the question; I performed these in the month of September 1820, and the mutual action of voltaic conductors was demonstrated.

As regards the action of our earth on a conducting wire, the analogy between the earth

(1) This fluid can only be that which results from the combination of the two electricities. In order to avoid repeating the phrase for this, I think that one should employ, like Euler, the name *ether,* to mean the fluid as defined here.

(2) See the *note* that I read before the Académie, on 24 June 1822, and which is included in the Annales de chimie, tom. XX, pag. 419–421, and in my Recueil d'observations électrodynamiques, pag. 316–318.

and a magnet is doubtlessly sufficient to most probably produce this action, and I do not see why several of the most senior European physicists think that the effect does not exist; not just like E. Erman, before I had made the experiment which showed it(3), but after this experiment had been presented at the Académie des Sciences, in the session of 30 October 1820, and repeated several times, during November of the same year, in the presence of the members and a great number of other physicists, who permitted me, at this time, to cite them as testifying to the motions produced by the action of the Earth on the movable parts of the equipment described and shown in the Annales de chimie et de physique, tome XV, pages 191–196, pl. 2, fig. 5, and pl. 3, fig. 71, and also in my Recueil d'observations électro-dynamics, pages 43–48, close to a year later, the English physicists still raised doubts about these complete experiments which were demonstrated before a large number of witnesses(1). One cannot deny the importance of these experiments, and one cannot refuse to admit that the discovery of the action of the earth on the conducting wires belongs to me as much as that of the mutual action of two conductors. It was of little value that I should merely have discovered the action of the earth on a conductor and the interaction of two conductors and verified them by experiments; it was more important:

1° To find the formula for the interaction of two elements of current.

2° To show by virtue of the law thus formulated (which governs the attraction of currents in the same direction and the repulsion of currents in contrary directions, whether the currents are parallel or at an angle)(2), that the action of the earth on conducting wires is identical in all respects, to the action which would be exerted on the same wires by a system, (fasces, Latin) of electric currents flowing in the east-west direction, when situated in the middle of Europe where the experiments which confirm this action were performed.

3° To calculate first, from consideration of my formula and the manner in which I have explained magnetic phenomena associated with electric currents forming very small closed circuits round particles of a magnetized body, the interaction between two particles of magnets regarded as two little solenoids each equivalent to two magnetic molecules, the one of austral and the other of boreal fluid; and the action which one of these particles exerts on an element of conducting wire; then to check that these calculations give

(3) In a very remarkable Mémoire, printed in 1820, this well-known physicist said that the conducting wire had the advantage over the magnetic needle that it could be used for delicate experiments because the motion that it takes in the experiments would not influenced at all by the action of the Earth.

(1) See M. Faraday's Mémoire, published on 11 September 1821. The translation of this Mèmoire appears in the Annales de chimie et de physique, tom. XVIII, pag. 337–370, and in my Recueil d'observations électro-dynamics, pag. 125–158. Due to a mistake in printing it shows the date 4 September 1821, instead of 11 September 1821.

(2) The experiments which demonstrate the action of two currents parallel in both cases, were communicated to the Académie in the session of 9 October 1820. The apparatuses that I employed are described and drawn in the tome XV of the Annales de chimie et de physique, specifically : 1° that for the mutual action of two rectilinear currents, pg. 72, Pl. 1, fig. 1, and in more detail in my Recueil d'observations électro-dynamiques, pg. 16–18; 2° that for the mutual action of two currents forming an arbitrary angle, pg. 171 of the same volume XV of the Annales de chimie et de physique, Pl. 2, fig. 2, and in my Recuell, pg. 23. The Figures in my Recueil carry the same numbers as in the Annales.

exactly, in the first case the law established by Coulomb for the action of two magnets, and in the second case, the law which M. Biot has proposed for the forces which develop between a magnet and a conducting wire. It is thus that I reduced both kinds of action to a single principle and also that which I discovered exists between two conducting wires. Doubtless it was simple, having assembled all the facts, to conjecture that these three kinds of action depended on a single cause. But it was only by calculation that this conjecture could be substantiated, and this is what I have done. I draw no premature conclusion as to the nature of the force which two elements of conducting wires exert on each other, for I have sought only to obtain the analytical expression of this force from experimental data. By taking this as my starting point I have demonstrated that the values of the other two forces given by the experiment (the one between an element of conducting wire and what is called a magnetic molecule, the other between two of these molecules) can be deduced purely mathematically by replacing, in one or the other case, as is necessary, according to my conception of the constitution of magnets, each magnetic molecule by one of the two extremities of an electrodynamic solenoid. Thereafter, all that can be deduced from these values of the forces is necessarily contained in my manner of considering the effects which are produced and it becomes a corollary of my formula, and that alone should be sufficient to demonstrate that the interaction of two conductors is, in fact, the simplest case and that from which it is necessary to proceed in order to explain all other cases. The following considerations seem to finish a complete confirmation of these general results of my work; they are founded on the simplest of notions about the composition of forces in reference to the interaction of two systems of infinitely close points in the various cases which can arise–whether these systems only contain points of the same type, that is to say, points which attract or repel similar points of the other system, or whether one of the systems, or both, contains points of the two opposite types of which those of one type attract what those of the other repel, and repel what they attract.

Initially suppose that both of the two systems are made up of molecules of the same type, that is to say those that act on the other entirely by attraction or entirely by repulsion, with forces proportional to their masses; such as $\mathtt{M}$,$\mathtt{M}'$,$\mathtt{M}''$, etc. (Pl. 2 pg. 114, fig. 35 pg. 129), the molecules which compose the first, and m any collection of the second : in successively composing all the actions ma, mb, md, etc., caused by $\mathtt{M}$,$\mathtt{M}'$,$\mathtt{M}''$, one obtains the results mc, me, etc., such that the last is the of the system $\mathtt{MM}'\mathtt{M}''$ at the point m, and passes near the center of inertia of the system. By the same reasoning relative to the other molecules of the second system, one finds that the corresponding resultants all pass very close to the center of inertia of the second system, and will have a general resultant which passes close to the center of inertia of the second we call the *action centers* the two points closest to the respective centers of inertia of the two systems by which the general resultants pass; it is evident that they will not tend, due to the small distances where they are the centers of inertia, to impart to each system a translation motion.

Suppose, in a second case, that the molecules of the second system are all of the same type, those of the first are the ones which attract and the others repulse with respect to the molecules of the second system, the first will give a result of (Pl. 2 pg. 114, fig. 36 pg. 129), passing by their centers of action $\mathtt{N}$, and by the center of action o of the other system: similarly, the repulsive particles yield a resultant oc, passing by their center of action $\mathtt{P}$ and by the same point o : the general result is then the diagonal og; and since it passes close to the center of inertia of the second system, it will not tend to impart a translation motion.

This resultant is therefore in the same plane with the three centers of action o, N,P; and when the attracting molecules are of the same number as the repulsing ones, and acting with the same intensity, its direction is, moreover, perpendicular to the line oO which divides the angle PoN in two equal parts.

Consider finally the case where the two systems are both composed of molecules of differing types. Let N and P (Pl. 2 pg. 114, fig. 37 pg. 130) be the action centers respectively of first, attractive and repulsive molecules, taking n and p be the corresponding centers of the second, of a type such that they have attraction between N and p, as well as between n and P, and they have repulsion between N and n, as well as between P and p. The combined actions of N and P on p give a resultant following the diagonal pe : similarly, the actions of N and P on n give a resultant nf. To produce the general resultant, one extends these two lines until they meet in o, and taking $oh = pe$, and $ok = nf$, the diagonal ol will be the sought for resultant which gives the action produced by the system PN on the system pn. But since the point o does not take part in the system pn, it is necessary to conclude that it enters into this in an invariable manner without being in the first system PN; and the force ol tends in general due to this connection, to operate on pn a translation motion and a rotational motion about its center of inertia.

Now examine the reaction of the second system on the first : following the fundamental axiom of mechanics, that the action and reaction of two particles on each other are equal and directly opposed, it is necessary in order to obtain this to successively compose the equal and directly opposed forces which the particles of the first system exert on the particles of the second, and it is evident that the total reaction that is thus found is always equal and directly opposed to the total action.

In the first case, the reaction is of course represented by the line $m\epsilon$ (Pl. 2 pg. 114, fig. 35 pg. 129), equal and opposed to the resultant me, and that which one can assume is applied at the action center of the first system which is located in that direction; from which it follows, always neglecting the small difference of the position of the action center and the center of inertia, that one will have here only translation motion.

In the second case, the reaction will also be represented by the line $o\gamma$ (Pl. 2 pg. 114, fig. 36 pg. 129), equal and opposite to og. But, since the point o is not part of the first system, and since in general it will not be traversed by the direction $o\gamma$, it must be considered that this point o must be invariably in the first system not in the second; and, by this relationship, the force $o\gamma$ tends in general to induce on the system PN a double translation and rotational motion. In addition, this force $o\gamma$ is in the plane PoN; and since the attractive molecules are of the same number as the repulsive ones and act with the same intensity; its direction is, like that of og, perpendicular to oO.

Finally, in the third case, the reaction is represented by the line $o\lambda$ (Pl. 2 pg. 114, fig. 37 pg. 130), equal and opposed to the resultant ol, and applied like it at the point o. To find the action of ol on pn, we concluded just now that this point o is located in the second system pn without being in the first PN. In order to now have the reaction exerted on this one, we consider the force $o\lambda$ applied at a point located in o, and in the first system PN without being in the second. This force tends in general to operate on PN a double motion of translation and rotation.

If one compares these results with the experimental measurements, relative to the directions of the forces which occur in the three types of actions that we distinguished above, it is easy to see that the three cases that we examined correspond with them exactly. If

two voltaic conductor elements act on each other the action and reaction are, as in the first case, determined by the line which connects the two elements; when it concerns the force which acts between an element of a conducting wire and a magnetic particle containing two poles of opposite types, which acts in the opposite sense with equal intensities, the action and reaction are, as in the second case, pointed perpendicular to line which connects the particle and the element; and two particles of a magnetic rod, which are not themselves but two very small magnets, exert on each other a more complex action, resembling that of the third case, and thus one cannot draw a conclusion without considering the result to be of four forces, two attractive and two repulsive : it is thus easy to conclude that there is only an element of a conducting wire such that one can suppose that all the points exert the same type of action, and to judge that it is, of the three kinds of force which are here considered, the one that one can view as the simplest.

But what the force is between two elements of conducting wires is quite simple, and that those which develop, one between one of its elements and a magnetic particle where there always exist two poles of the same intensity, the other between two such particles, are results more or less complicated, thus is it necessary to conclude that the first of these forces should be considered as truly elementary? It is this that I have always, and after long consideration in the *Notes sur l'exposé sommaire des nouvelles expériences électro-magnétiques*, published in 1822(1), I sought to find an explanation through the reaction of fluid distributed in space, and such that the vibrations produce the phenomenon of light : I have only said that one should consider as *elementary*, in the sense that chemists arrange in the class of simple bodies all that they cannot further decompose, those that are otherwise presumptions based on the analogy that can indicate that they are really composite, and since after one has determined the value from experiments and from calculation shown in this Treatise, it was starting with this specific value that it was necessary to calculate those of all the forces that are manifest in the more complicated cases.

But even so it is true, whether the reaction of a fluid of rarity such that one cannot suppose that it reacts due to its mass, whether a combination of inherent forces of the two electric fluids, it does not follow unless the action would still always be opposed to the reaction following the same line; because, as one has seen in the considerations just discussed, this circumstance necessarily enters into all the complex actions, since it occurs for all the really elementary forces since they make up the complex action. By applying the same principle on the force which acts between that which one calls a magnetic molecule and an element of a conducting wire, one sees that this force, considered as acting on the element, passes through it, the reaction of the element on the molecule should also be directed in a manner to pass through the location and not through the molecule. This consequence of a principle which has until now been admitted by all physicists, does not appear easy to demonstrate by experiment, in the case of the force which we are discussing, because in all the experiments where one causes an action on a magnet a part of the conducting wire forms a closed circuit, the result that one obtains for the total action is the same, whether one supposes that this force passes through the element of the conducting wire or through the magnetic molecule, as one can see in this Treatise; it is this that has led many physicists to suppose that the action exerted by the element of the conducting wire passes only through this element, and that the reaction which is opposed and parallel is not directed along the same line, when it passes through the molecule and forms with the first force that which they call a primitive couple.

(1) Recueil d'observations électro-dynamiques; page 215.

The following calculations will provide me the occasion to examine in detail this singular hypothesis. One will see, by this examination, that it is not only opposed to one of the fundamental principles of mechanics, but that it is otherwise completely useless for explaining the observed facts, and a false interpretation of these facts could only be adopted by the physicists who do not admit that magnets obtain their properties from the action of electric currents through their particles.

The phenomena produced by the two electric fluids moving in voltaic conductors that appear to be different from those which manifest their presence when they are stationary in their electric bodies in an ordinary manner, for which one has also pretended that the first were not attributable to the same fluids as the second. Is is exactly as if one concluded that the suspension of mercury in a barometer is a phenomenon entirely from that of sound, that one should not attribute to the same fluid atmospheric, at rest in the first case and in motion in the second; but it must be admitted, for two facts sufficiently different, two fluids such that one acts solely to press on the open surface of the mercury, and the other transmits the vibratory motions which produce the sound.

Nothing proves otherwise than the force expressed by my formula cannot resolve the attractions and the repulsions of molecules of the two electric fluids, with relation of inverse square of the distance between the molecules. The fact of a rotational motion continually accelerating until the friction and resistance of the liquid in which the magnet or voltaic conductor is immersed that presents this kind of motion renders the velocity constant, appears at first absolutely opposed to the kind of explanation of electrodynamic phenomena. In effect, the principle of conservation of living forces, which is a necessary consequence of the laws of motion, it necessarily follows that when the elementary forces, which are here the attractions and replulsions with inverse square of the distances, are expressed by simple functions of the mutual distances between the points between which they act, and that one part of these points are invariably fixed with respect to each other and by virtue of these forces, the others remain fixed, the first cannot return to the same situation, as regards the second, with velocities larger than those that they had when they shared this same situation. However, for the rotational motion continuously applied to the mobile conductor by the action of a fixed conductor, all the first points return to the same position with greater and greater velocities for each revolution, until the friction and the resistance of the acid in which the crown of the conductor is immersed add an additive term to the rotational velocity of the conductor : it will be therefore constant, despite the frictions and the resistance.

It is thus completely demonstrated that one cannot provide reasons for the phenomena produced by the action of two voltaic conductors, by supposing that the electric molecules act by reason of the inverse square of the distance are distributed over the conducting wires, in a manner which leaves them fixed and can, in consequence, be regarded as invariably fixed between them. On must conclude that these phenomena are due to the two electric fluids as flowing(1) continuously in conducting wires, of extremely rapid motion, in alternatively

(1) Since the first work by physicists on electrodynamic phenomena, many scientists believe they can explain this by the distributions of molecules, whether electric, or magnetic, residing in the voltaic conductors. Since the discovery of the basic rotational movement by M. Faraday was published, I saw immediately that this completely upsets this hypothesis, and here are the terms in which I announced this observation, while that which I say here is just the development, in the *Exposé sommaire des nouvelles expériences électro-magnétiques*

joining and separating in the intervals of the particles of these wires. It is because the phenomena here in question cannot be produced but by electric motion, I believe it should be designated by the name *electrodynamic phenomena;* those of *electromagnetic phenomena*, as they were named until now is well suited since it only indicates the action discovered by M. Ørsted between a *magnet* and an *electric current*, but it can only be seen as a false idea since I have found that one produces phenomena of the same kind without a *magnet*, and by only the mutual action of two *electric currents*.

It is only in the case where one assumes the electric molecules are at rest within the body where they manifest their presence by the attractions or repulsions produced by them in this body, if one demonstrates that an indefinitely accelerating motion cannot result from the forces which excite the electric molecules in this state of rest can only be dependent on their mutual distances. When one considers the contrary that, if set in motion in the conducting wire by the action of the battery, they change continually their location, if they recombine at each instant with the neutral fluid and separate again, and then promptly reunite with other fluid molecules of opposite nature, it is not contradictory to admit that these actions due to the inverse square law of the distances which controls each molecule, it can result between two elements of conducting wires a force which depends not only on their distance; but also on the directions of the two elements following which the electric molecules move, and reunite with the molecules of opposite type, and separate in the next instant to unite with others. But, it is exactly and uniquely from this distance and from these directions that the force which envelops then depends, and thus the experiments and the calculations shown in this Treatise have given me the value. In order to make a clear idea of what happens in the conducting wire, it is necessary to pay attention to what enters the metal molecules as it is composed of a common fluid made up of positive and negative fluid, not just in the proportions which constitute the neutral fluid, but with an excess of the fluid which is naturally opposed to proper electricity of these metal molecules, and which conceals this electricity, as I have explained letter that I wrote to M. Van-Beek at the beginning of 1822(1) : it is in this intermolecular electric fluid that all the motion takes

---

conducted by various physicists since the month of March 1821, which I read in the public session of the Académie royale des Sciences on 8 April 1822.

> ≪Such is the new progress which is becoming a branch of physics, as far as we know in existence for only two years, and has already revealed quite astounding facts it may be that all that science has up to the present offered of marvelous phenomena. A motion which continues forever in the same direction, despite frictions, despite resistance of the medium, and this motion produced by the mutual action of two bodies which remain constantly in the same state, is a fact without example in all that we know of the properties offered by inorganic matter; it demonstrates that the action which emanates from the voltaic conductors cannot be due to a particular distribution of certain fluids at rest in these conductors, since they are ordinary electric attractions and repulsions. One cannot attribute this action of fluids in motion in the conductor where they flow so as to rapidly carry from one extremity of the battery to the other.≫

See the Journal de physique where this exposition was inserted during this time, vol. XCIV, page. 65, and my Recueil d'observations électro-dynamiques, page 205.

(1) Journal de physique, tome XCIII, pages 450–453, et Recueil d'observations électro-dynamiques, pages 174–177.

place, all the decompositions and recombinations which consitute the electric current.

As the liquid is interposed between the plates of the battery is, without comparison, a less strong conductor than the electric wire which joins the extremities, it takes a time, very short in fact, but even so appreciable, during which the electricity inter-molecular, supposed at first to be in equilibrium, it decomposes during each of the intervals between the two molecules of the wire. This decomposition gradually augments until the positive electricity in an interval matches up with the negative electricity of the following interval in the sense of the current, and its negative electricity with the positive electricity from the previous interval. This reunion cannot be other than instantaneous like a Leyden jar; and the action between the conducting wires, which envelop them, while they are located, in the contrary direction from which they then exercise decomposition, cannot by consequence diminish the effect of this, since the effect produced by a force is due to its intensity and the time during which it acts; thus here the intensity should be the same, since the two electric fluids separate and reunite : but the time during which they are separating is without comparison much larger than that during their reunion.

The action varies with the distances between molecules of the two electric fluids during this separation, it is necessary to integrate, with respect to time and during the entire period of separation, the value force occurring at each instant, and divide afterwards, by this period, the integral so obtained. Without making this calculation, for which the data are required, which are still missing, over the manner in which the distances of the electric molecules vary, with time, during each interval for the inter-molecular conducting wire, it can thus be seen that the forces produced in this manner, between two elements of this wire, should depend on the direction of the electric current in each of its elements.

If it were possible, starting from this consideration, to find that the mutual action of two elements is in effect proportional to the formula by which I have represented it, this explanation of the fundamental fact of all the theory of electrodynamic phenomena would clearly be preferred to all others; but it would require research that I have not had time to carry out, in addition that research even more difficult would have to be carried out in order to find if a contrary explanation, where one attributes the electrodynamic phenomena to motions in the ether by electric currents, could lead to the same formula. For any of these hypotheses and other suppositions which one could make to explain these phenomena, they will always be represented by the formula that I have deduced from the results of experiments, interpreted by calculation; and it would remain demonstrated mathematically, when considering magnets to be assemblies of electric currents arranged about their particles as I have said, the values of these forces which are, in each case, given by experiment, and all the circumstances of the three types of actions which occur, one between two magnets, another between a conducting wire and a magnet, and the third between two conducting wires, are derived from a single force, acting between two electric current elements following the line which joins the media.

As for the expression of this force, it is one of the most simple among those that do not depend only the distance, but also on the directions of the two elements; as these directions only enter in terms that contain second derivatives of the square root of the distance of the two elements, taken by varying alternately two arcs of electric currents of which this distance is a function, differential which depends itself on the directions of the two elements, and which enters elsewhere in the value given by my formula in a very simple manner, when one has the second derivative for this value, multiplied by a constant coefficient and divided by the square root of the distance; by observing that the force is repulsive when the second

derivative is positive, and attractive when it is negative. It is this that explains the sign – which is found at the beginning of the general expression

$$-\frac{2ii'}{\sqrt{r}}\cdot\frac{\mathrm{d}^2\sqrt{r}}{\mathrm{d}s\,\mathrm{d}s'}\mathrm{d}s\,\mathrm{d}s'$$

of this force, following the usage where one take the attractions as positive forces, and the repulsions as negative forces.

19. Identity of the exerted actions, either on the pole of a magnet, or on the extremity of a solenoid, by a closed voltaic circuit and by an assembly of two closely-spaced surfaces that terminate this circuit, and on which two fluids are widely spread and connected to the magnetic fluids, taken as the two magnetic fluids, austral and boreal, in a manner such that the magnetic intensity is everywhere the same

Throughout history, whenever hitherto unrelated phenomena have been reduced to a single principle, a period has followed in which many new facts have been discovered, because a new approach in the conception of causes suggests a multitude of new experiments and explanations. It is thus that Volta's demonstration of the identity of galvanism and electricity was accompanied by the construction of the electric battery with all the discoveries which have sprung from this admirable device. Judging from the important results of the work of M. Becquerel on the influence of electricity in chemical compounds, and that of M M. Prevost and Dumas on the causes of muscular contraction, it may be hoped that their discovery of new knowledge over the past four years and its reduction to a single principle of the laws of attractive and repellent forces between electric conductors, will also lead to a host of other results which will establish the links between physics, on the one hand, and chemistry and even physiology, on the other, for which there has been a long-felt need, though we cannot flatter ourselves for having taken so long to realize it.

It still remains to consider the actions exerted by a closed circuit of arbitrary shape, magnitude and position on a solenoid, or on some other circuit of arbitrary shape, magnitude and position; the principal result from such inquiries is the similarity which exists between the forces produced by a circuit, whether acting on another closed circuit or a solenoid, and the forces which would have been exerted by points whose action were precisely that which is attributed to molecules of what is called austral and boreal fluid. Let us assume that these points are distributed in the manner which I have just explained over surfaces terminated by circuits, and that the extremities of the solenoid are replaced by two magnetic molecules of opposite types. The analogy seems at first to be so complete that all electrodynamic phenomena appear to be reduced to the theory associated with these two fluids. It is soon seen, however, that this only applies to conductors which form rigid and closed circuits, that it is only phenomena which are produced by conductors forming such circuits that may be explained in this way, and that in the end it is only the forces which my formula represents that fit all the facts. It is, moreover, by the same analogy I deduce demonstratingan important theorem which we can state as : the mutual action between two rigid and closed circuits, or that of a rigid and closed circuit and a magnet, can never produce continuous movement with a velocity which accelerates indefinitely due to the fact that the resistances and the frictions in the apparatus will render this velocity constant.

Finally in order to leave nothing out on this subject, I will start by giving the formulas relative to the mutual action of two conducting wires a more general and symmetric form. For this take s and s' any two curves that are assumed traversed by electric currents of which we continue to designate the intensities by i and i'. Let $\mathrm{d}s = \mathtt{M}m$ (Pl. 2 pg. 114, fig. 38 pg. 130) an element of the first curve, $\mathrm{d}s' = \mathtt{M}'m'$ and element of the second; x, y, z and x', y', z' the coordinates of their midpoint o, o', and r the line oo' which joins them, which should be considered as a function of two independent variables s and s' which represent the arcs of the two curves evaluated from two fixed points taken on them. The mutual action of the two elements $\mathrm{d}s, \mathrm{d}s'$, is, as we have seen above, a force directed following the line r, and having the value

$$ii'\,\mathrm{d}s\mathrm{d}s'r^k\frac{\mathrm{d}\left(r^k\frac{\mathrm{d}r}{\mathrm{d}s}\right)}{\mathrm{d}s'}.$$

One can write this more simply as :

$$ii'\,r^k\,\mathrm{d}'(r^k\,\mathrm{d}r),$$

to distinguish by the characteristics d and d' the differentials relative to the variation of only the coordinates x, y, z of the element $\mathrm{d}s$, which one obtains by varying only the coordinates x', y', z' of the element $\mathrm{d}s'$; a distinction which we will use in all cases where we consider differentials taken the ones from one of the two forms, and the others from the other.

This force being attractive, it must, in order to have those of its components which are parallel to the x axis, by multiplying the value by $\frac{x-x'}{r}$ or by $-\frac{x-x'}{r}$, then one considers it as acting on the element $\mathrm{d}s'$ or on the element $\mathrm{d}s$; in this last case, the component is then equal to

$$ii'\,r^{k-1}(x-x')\mathrm{d}'(r^k\,\mathrm{d}r).$$

One can put this expression in another form by making use of the value that one obtains for $u\mathrm{d}v$, u and v representing any quantity, as long as one adds, member by member, the two identical equations

$$u\mathrm{d}v + v\mathrm{d}u = \mathrm{d}(uv),$$
$$u\mathrm{d}v - v\mathrm{d}u = u^2\mathrm{d}\left(\frac{v}{u}\right),$$

this value is

$$u\mathrm{d}v = \frac{1}{2}\mathrm{d}(uv) + \frac{1}{2}u^2\mathrm{d}\frac{v}{u},$$

and by making

$$u = r^{k-1}(x-x'), \quad v = r^k\mathrm{d}r,$$

in conclusion

$$\begin{aligned} r^{k-1}(x-x')\mathrm{d}'(r^k\mathrm{d}r) &= \frac{1}{2}\mathrm{d}'\left[r^{2k-1}(x-x')\mathrm{d}r\right] + \frac{1}{2}r^{2k-2}(x-x')^2\mathrm{d}'\frac{r\mathrm{d}r}{x-x'} \\ &= \frac{1}{2}\mathrm{d}'\frac{(x-x')\mathrm{d}r}{r^n} + \frac{1}{2}\frac{(x-x')^2}{r^{n+1}}\mathrm{d}'\frac{r\mathrm{d}r}{x-x'}, \end{aligned}$$

since $2k + n = 1$, which gives

$$2k-1 = -n, \quad 2k-2 = -n-1.$$

But

$$r^2 = (x-x')^2 + (y-y')^2 + (z-z')^2,$$

and as a consequence

$$\frac{r\,\mathrm{d}r}{x-x'} = \mathrm{d}x + \frac{y-y'}{x-x'}\mathrm{d}y + \frac{z-z'}{x-x'}\mathrm{d}z,$$

where

$$\mathrm{d}'\frac{r\,\mathrm{d}r}{x-x'} = \frac{(z-z')\mathrm{d}x' - (x-x')\mathrm{d}z'}{(x-x')^2}\mathrm{d}z - \frac{(x-x')\mathrm{d}y' - (y-y')\mathrm{d}x'}{(x-x')^2}\mathrm{d}y.$$

The component parallel to the axis x has therefore the value

$$\frac{1}{2}ii'\mathrm{d}'\frac{(x-x')\mathrm{d}r}{r^n} + \frac{1}{2}ii'\left[\frac{(x-x')\mathrm{d}x' - (x-x')\mathrm{d}z'}{r^{n+1}}\mathrm{d}z - \frac{(z-z')\mathrm{d}y' - (y-y')\mathrm{d}x'}{r^{n+1}}\mathrm{d}y\right].$$

The two terms of this expression can be considered separately as two forces such that the union is equivalent to the force being looked for. Or, it is easy to see that when the curve s' forms a closed circuit, all the forces such that they have for expression in part $\frac{1}{2}ii'\,\mathrm{d}'\frac{(x-x')\mathrm{d}r}{r^n}$, from the action of all the elements $\mathrm{d}s'$ of the circuit s' on the same element $\mathrm{d}s$, which mutually cancels. In effect, all the forces are applied at the same point o, in the element $\mathrm{d}s$, after a similar line parallel to the x axis; it is necessary then, to have the force produced following this line due to the action of any portion of the conductor s, integrated $\frac{1}{2}ii'\,\mathrm{d}'\frac{(x-x')\mathrm{d}r}{r^n}$ to one of the extremities of this portion at the other, and one finds

$$\frac{1}{2}ii'\left[\frac{(x-x'_2)\mathrm{d}r_2}{r_2^n} - \frac{(x-x'_1)\mathrm{d}r_1}{r_1^n}\right];$$

defining $x'_1, r_1, \mathrm{d}r_1$, the quantities which are attached to an extremity, and $x'_2, r_2, \mathrm{d}r_2$ those that are relative to the other, this value becomes evidently null when, the circuit is closed, its two extremities are at the same point.

When the conductor s' so forms a closed circuit, it follows, to obtain more simply the action that it produces on the element $\mathrm{d}s$ parallel to the x axis, remove, from the expression of the parallel component parallel to this axis, the part $\frac{1}{2}ii'\,\mathrm{d}'\frac{(x-x')\mathrm{d}r}{r^n}$, and only consider the other part

$$\frac{1}{2}ii'\left[\frac{(z-z')\mathrm{d}x' - (x-x')\mathrm{d}z'}{r^{n+1}}\mathrm{d}z - \frac{(x-x')\mathrm{d}y' - (y-y')\mathrm{d}x'}{r^{n+1}}\mathrm{d}y\right]$$

which we represent by $\mathtt{X}$.

By applying the same considerations to the other two components of the same force which are parallel to the y and of z axes, one substitutes into them the forces $\mathtt{Y}, \mathtt{Z}$, obtaining for values

$$Y = \frac{1}{2}ii'\left[\frac{(x-x')\mathrm{d}y' - (y-y')\mathrm{d}x'}{r^{n+1}}\mathrm{d}x - \frac{(y-y')\mathrm{d}z' - (z-z')\mathrm{d}y'}{r^{n+1}}\mathrm{d}z\right],$$

$$Z = \frac{1}{2}ii'\left[\frac{(y-y')\mathrm{d}z' - (z-z')\mathrm{d}y'}{r^{n+1}}\mathrm{d}y - \frac{(z-z')\mathrm{d}x' - (x-x')\mathrm{d}z'}{r^{n+1}}\mathrm{d}x\right].$$

Thus, when a closed circuit is considered, the resultant R of the three forces X, Y, Z, to which the components of the force $-ii'r^k \mathrm{d}'(r^k \mathrm{d}r)$ is reduced, replace this force; and the ensemble of all the forces R is equivalent to that of all the forces exerted by each of the elements $\mathrm{d}s'$, of the closed circuit s', and represent the total action of this circuit on the element $\mathrm{d}s$. See now what is the value and the direction of this force R.

Let u, v, w, be the projections of the line r on the plane of the yz, the xz and the xy, making respectively the angles φ, χ, ψ, with axes of the y, z, and x. Consider the sector $\mathrm{M}'om'$ (Pl. 2 pg. 114, fig. 38 pg. 130), which has as base the element $\mathrm{d}s'$, and for vertex the point o, midpoint of $\mathrm{d}s$, the coordinates of which are x, y, and z. Call λ, μ, ν the angles which the normal to the plane of this sector makes with the axes, and θ' the angle made between the directions of $\mathrm{d}s'$ and of r. Twice the area of this sector is $r\mathrm{d}s' \sin\theta'$, and its projections on the planes coordinates are

$$u^2 \mathrm{d}'\varphi = r\,\mathrm{d}s' \sin\theta' \cos\lambda = (y'-y)\mathrm{d}z' - (z'-z)\mathrm{d}y',$$

$$v^2 \mathrm{d}'\chi = r\,\mathrm{d}s' \sin\theta' \cos\mu = (z'-z)\mathrm{d}x' - (x'-x)\mathrm{d}z',$$

$$w^2 \mathrm{d}\psi = r\,\mathrm{d}s' \sin\theta' \cos\nu = (x'-x)\mathrm{d}y' - (y'-y)\mathrm{d}x'.$$

We can express this new form in the values of forces X, Y, Z,

$$\mathrm{X} = \frac{1}{2} ii' \Big(\frac{v^2 \mathrm{d}'\chi}{r^{n+1}} \mathrm{d}z - \frac{w^2 \mathrm{d}\psi}{r^{n+1}} \mathrm{d}y \Big) = \frac{1}{2} \cdot \frac{ii'\mathrm{d}s\,\mathrm{d}s' \sin\theta'}{r^n} \Big(\frac{\mathrm{d}z}{\mathrm{d}s} \cos\mu - \frac{\mathrm{d}y}{\mathrm{d}s} \cos\nu \Big),$$

$$\mathrm{Y} = \frac{1}{2} ii' \Big(\frac{w^2 \mathrm{d}'\psi}{r^{n+1}} \mathrm{d}x - \frac{u^2 \mathrm{d}\varphi}{r^{n+1}} \mathrm{d}z \Big) = \frac{1}{2} \cdot \frac{ii'\mathrm{d}s\,\mathrm{d}s' \sin\theta'}{r^n} \Big(\frac{\mathrm{d}x}{\mathrm{d}s} \cos\nu - \frac{\mathrm{d}z}{\mathrm{d}s} \cos\lambda \Big),$$

$$\mathrm{Z} = \frac{1}{2} ii' \Big(\frac{u^2 \mathrm{d}'\varphi}{r^{n+1}} \mathrm{d}y - \frac{v^2 \mathrm{d}\chi}{r^{n+1}} \mathrm{d}x \Big) = \frac{1}{2} \cdot \frac{ii'\mathrm{d}s\,\mathrm{d}s' \sin\theta'}{r^n} \Big(\frac{\mathrm{d}y}{\mathrm{d}s} \cos\lambda - \frac{\mathrm{d}x}{\mathrm{d}s} \cos\mu \Big),$$

Now these values give

$$\mathrm{X}\frac{\mathrm{d}x}{\mathrm{d}s} + \mathrm{Y}\frac{\mathrm{d}y}{\mathrm{d}s} + \mathrm{Z}\frac{\mathrm{d}z}{\mathrm{d}s} = 0,$$

$$\mathrm{X}\cos\lambda + \mathrm{Y}\cos\mu + \mathrm{Z}\cos\nu = 0;$$

that is to say that the direction of the force R makes with that of the element $m\mathrm{M} = \mathrm{d}s$, and with the normal op to the plane of the sector $\mathrm{M}'om'$, the angles for which the cosines are zero, so that this force is both in the plane of the sector and perpendicular to the element $\mathrm{d}s$. As to its intensity, one has by known formulas

$$\mathrm{R} = \sqrt{\mathrm{X}^2 + \mathrm{Y}^2 + \mathrm{Z}^2} = \frac{1}{2} \cdot \frac{ii'\mathrm{d}s\mathrm{d}s' \sin\theta' \sin pom}{r^n} = \frac{1}{2} \cdot \frac{ii'\mathrm{d}s\mathrm{d}s' \sin\theta' \sin mok}{r^n};$$

ok being the projection of om on the plane of the sector $\mathrm{M}'om'$. One can decompose this force in the plane of the same sector into two others, one S directed following the line $oo' = r$, the other T perpendicular to this line. This one is

$$\mathrm{T} = \mathrm{R}\cos \mathrm{T}o\,\mathrm{R} = \mathrm{R}\cos hok = \frac{1}{2} \cdot \frac{ii'\mathrm{d}s' \sin\theta' \cos mok \cos hok}{r^n};$$

and since the trihedral angle formed by the directions of om, ok and oh give

$$\cos mok \cos hok = \cos moh = \cos\theta,$$

it becomes

$$\mathtt{T} = \frac{1}{2} \cdot \frac{ii' \,\mathrm{d}s \,\mathrm{d}s' \sin\theta' \cos\theta}{r^n}.$$

The force $\mathtt{S}$ following oh is

$$\mathtt{S} = \mathtt{R} \sin hok = \mathtt{T} \tan hok.$$

But by designating by ω the inclination of the plane moh on the plane hok, which is itself in the sector $\mathtt{M}'om'$, one has

$$\tan hok = \tan\theta \cos\omega;$$

thus

$$\mathtt{S} = \frac{1}{2} \cdot \frac{ii' \,\mathrm{d}s \,\mathrm{d}s' \sin\theta \sin\theta' \cos\omega}{r^n}.$$

If one integrates the expressions for $\mathtt{X}, \mathtt{Y}, \mathtt{Z}$ for the full range pf the closed circuit s', one obtains the three components of the action exerted by all this circuit on the element $\mathrm{d}s$; by replacing n by its value 2, the three components become

$$\frac{1}{2} ii' \left(\mathrm{d}z \int \frac{v^2 \mathrm{d}'\chi}{r^3} - \mathrm{d}y \int \frac{w^2 \mathrm{d}'\psi}{r^3} \right),$$

$$\frac{1}{2} ii' \left(\mathrm{d}x \int \frac{w^2 \mathrm{d}'\psi}{r^3} - \mathrm{d}z \int \frac{u^2 \mathrm{d}'\varphi}{r^3} \right),$$

$$\frac{1}{2} ii' \left(\mathrm{d}y \int \frac{u^2 \mathrm{d}'\varphi}{r^3} - \mathrm{d}x \int \frac{v^2 \mathrm{d}'\chi}{r^3} \right).$$

The similar forces applied to all the elements $\mathrm{d}s$ of the curve s will provide the total action exerted by the circuit s' on the circuit s. One obtains them by integration again the preceding expressions over the full extent of the last circuit.

Imagine now two surfaces chosen at random σ, σ', terminated by two contours s, s', such that all the points must lie invariably between them and with all those of the surface corresponding, and on these surfaces an infinitely thin layer of the same magnetic fluid which is held by a coercive force sufficient so that it cannot be displaced. Considering on these two surfaces two portions infinitely small of second order that we will represent by $\mathrm{d}^2\sigma$ and $\mathrm{d}^2\sigma'$, whose positions are determined by the coordinates x, y, z for the first, x', y', z' for the second, and whose distance is r, their mutual action will a repulsive force directed following the line r and represented by $-\frac{\mu\epsilon\epsilon' \,\mathrm{d}^2\sigma \,\mathrm{d}^2\sigma'}{r^2}$, that we consider as acting on the element $d^2\sigma$; ϵ, ϵ' designating here that which one calls the thickness of the magnetic layer on each surface; μ is a constant coefficient, such that $\mu\epsilon\epsilon'$ represents the repulsive action that will occur, if one connects two points located at a distance equal to unity, on the one hand all the fluid spread on an area equal to unity of the surface, where the spreading will be constant and equal on ϵ, on the other all the fluid spread on another area equal to unity of the surface, where the spreading will also be constant and equal on ϵ'.

In decomposing this force parallel to the three axes, one obtains the three components

$$\frac{\mu\epsilon\epsilon' \mathrm{d}^2\sigma \mathrm{d}^2\sigma'(x - x')}{r^3}, \quad \frac{\mu\epsilon\epsilon' \mathrm{d}^2\sigma \mathrm{d}^2\sigma'(y - y')}{r^3}, \quad \frac{\mu\epsilon\epsilon' \mathrm{d}^2\sigma \mathrm{d}^2\sigma'(z - z')}{r^3}.$$

Imagine now a new surface terminated by the same contour s which limits the surface σ, and such that all portions of normals to the surface σ comprise between them and the new surface are very small. Suppose that on this last surface a magnetic fluid is distributed of contrary type from the surface σ, so there is the portion of the new surface circumscribed by the normals directed by all contour points of the element of the surface $\mathrm{d}^2\sigma$ of a quantity equal to that of the fluid distributed on $\mathrm{d}^2\sigma$. Taking h as the length of the small portion of the normal to the surface σ, connected by the point which has coordinates x, y, z, and between the two surfaces, which measures over the full extent of the area indefinitely small $\mathrm{d}^2\sigma$ the distance of its points to the corresponding points of the other surface, and designating by ξ, η, ζ the angles which this normal makes with the axes, the three components of the mutual action between the element $\mathrm{d}^2\sigma'$ and the small portion of the new surface circumscribed as we just said, which is always equal to $\mathrm{d}^2\sigma$ since h is very small and one neglects it in the calculation, as we do here, the powers of h greater than the first are obtained by replacing in the expression which we just found, x, y, z par $x + h\cos\xi$, $y + h\cos\eta$, $z + h\cos\zeta$. And since the two fluids spread on the two areas equal to $d^2\sigma$ are of opposite type, it will be required to reduce the new values of these components whose values which were just found; the reduction, if one neglects the powers of h greater than the first, by differentiating thes values, replacing in the result the differentials of x, y, z by $h\cos\xi$, $h\cos\eta$, $h\cos\zeta$, and by changing the sign. These differentials having been taken by passing from the first surface σ to the other one, we designate them by δ, following the notation of the calculus of variations; we have thus for the component parallel to x which becomes $-\mu\epsilon\epsilon'\mathrm{d}^2\sigma\mathrm{d}^2\sigma'\delta\frac{x-x'}{r^3}$, when one there replaces δx by $h\cos\xi$, that is to say

$$-\mu\epsilon\epsilon'\mathrm{d}^2\sigma\mathrm{d}^2\sigma' h\cos\xi\left(\frac{3(x-x')\frac{\delta r}{\delta x}}{r^4} - \frac{1}{r^3}\right).$$

We will now determine the form and the position of the element $d^2\sigma$.

Designate as before by u, v, w the projections of the line r on the planes of the yz, the zx and the xy, and by φ, χ, ψ, the angles which these projections make with the y, of z and of x axes respectively. Decompose the first surface σ into an infinity of zones infinitely close, such that *abcd* (Pl. 2 pg. 114, fig. 42 pg. 131), by a sequence of perpendicular planes of yz led by the coordinate $m'p' = x$ of the point m'. Each area ends with two edges of the contour s of the surface σ, will be for the projection on the plane of yz an area decomposable itself into infinitely small quadrangular elements, which correspond to elements of the surface σ on the area where it acts. These are the elements which one should consider as the values of $\mathrm{d}^2\sigma$. Thus this is the position, with respect to the element $\mathrm{d}^2\sigma'$, that is determined by the polar coordinates r, u, φ, is equal to its projection $u\,\mathrm{d}u\,\mathrm{d}\varphi$ on the plane of yz divided by the cosine of the angle ξ made between this plane and the plane tangent to the surface σ with which the element $\mathrm{d}^2\sigma$ coincides. It is thus necessary to replace $d^2\sigma$ by $\frac{u\mathrm{d}u\mathrm{d}\varphi}{\cos\xi}$ in the preceding formula, and it will be

$$\mu h\epsilon\epsilon'\mathrm{d}^2\sigma' u\mathrm{d}u\mathrm{d}\varphi\left(\frac{3(x-x')\frac{\delta r}{\delta x}}{r^4} - \frac{1}{r^3}\right).$$

In order to calculate the value of $(x-x')\frac{\delta r}{\delta x}$, taking mx as the prolongation of the coordinate $mp = x$ of the point m the extension of the coordinate $mp = x$ of the point m where is situated the element $\mathrm{d}^2\sigma$, mu a parallel of the plane of yz directed in the plane $pmm'p'$, and mt perpendicular to the last plane at the point m. It is easy to see that the line mn,

following which $pmm'p'$ cuts the plane tangent in m, on the surface σ, makes with the three lines mx, mu, mt, which are mutually perpendicular, the angles the cosines of which are respectively

$$\frac{\mathrm{d}x}{\sqrt{\mathrm{d}x^2+\mathrm{d}u^2}}, \qquad \frac{\mathrm{d}u}{\sqrt{\mathrm{d}x^2+\mathrm{d}u^2}} \quad \text{and} \quad 0,$$

and which the normal mh makes with the same directions of the angles whose cosines are

$$\frac{\delta x}{\sqrt{\delta x^2+\delta u^2+\delta t^2}}, \quad \frac{\delta u}{\sqrt{\delta x^2+\delta u^2+\delta t^2}}, \quad \frac{\delta t}{\sqrt{\delta x^2+\delta u^2+\delta t^2}},$$

δt taking the position of the projection of mh on mt. One obtains therefore

$$\frac{\mathrm{d}x\delta x+\mathrm{d}u\delta u}{\sqrt{\mathrm{d}x^2+\mathrm{d}u^2}\sqrt{\delta x^2+\delta u^2+\delta t^2}}$$

for the cosine of the angle between the line mn and the normal mh and that this is a right angle, $\mathrm{d}x\delta x+\mathrm{d}u\delta u=0$, where $\frac{\mathrm{d}x}{\mathrm{d}u}=-\frac{\delta u}{\delta x}$. But, the equation

$$r^2=(x-x')^2+u^2,$$

gives

$$r\delta r=(x-x')\delta x+u\delta u,$$

and

$$r\mathrm{d}r=u\mathrm{d}u+(x-x')\mathrm{d}x,$$

from which one deduces

$$\frac{\delta r}{\delta x}=\frac{x-x'}{r}+\frac{u}{r}\cdot\frac{\delta u}{\delta x},$$

and

$$\frac{\mathrm{d}r}{\mathrm{d}u}=\frac{u}{r}+\frac{x-x'}{r}\cdot\frac{\mathrm{d}x}{\mathrm{d}u}=\frac{u}{r}-\frac{x-x'}{r}\cdot\frac{\delta u}{\delta x};$$

by eliminating $\frac{\delta u}{\delta x}$ between these two equations, it becomes

$$(x-x')\frac{\delta r}{\delta x}+u\frac{\mathrm{d}r}{\mathrm{d}u}=\frac{(x-x')^2}{r}+\frac{u^2}{r}=r.$$

If we now extract from the equation the value of $(x-x')\frac{\delta r}{\delta x}$ to substitute it in that of the force parallel to the x axis, we obtain

$$\mu h\epsilon\epsilon' u\,\mathrm{d}u\,\mathrm{d}\varphi\left(\frac{3r-3u\frac{\mathrm{d}r}{\mathrm{d}u}}{r^4}-\frac{1}{r^3}\right)=\mu h\epsilon\epsilon'\mathrm{d}\varphi\left(\frac{2u\mathrm{d}u}{r^3}-\frac{3u^2\,\mathrm{d}r}{r^4}\right)=\mu h\epsilon\epsilon'\mathrm{d}\varphi\mathrm{d}\frac{u^2}{r^3}.$$

The height h and the thickness ϵ of the infinitely thin fluid layer over the surface σ, can vary from one point of the surface to another; and to obtain the goal that we propose to represent with the aid of magnetic fluids, the actions of voltaic conductors, it is necessary to assume that these two quantities ϵ, h, vary in inverse relation one to the other, in a manner

such that their product $h\epsilon$ maintains the same value over the entire extent of the surface σ. Calling g the constant value of this product, the previous expression becomes

$$\mu g \epsilon' \, \mathrm{d}^2\sigma' \, \mathrm{d}\varphi \, \mathrm{d}\frac{u^2}{r^3}$$

and it can immediately be integrated. Its integral $\mu g \epsilon' \, \mathrm{d}^2\sigma' \, \mathrm{d}\varphi\left(\frac{u^2}{r^3} - \mathtt{C}\right)$ expresses the sum of the forces parallel to the x axes which act on the elements $\mathrm{d}^2\sigma$ of the area of the surface σ closed by the two planes determined by $m'p'$ which include the angle $d\varphi$. The surface σ being terminated by the closed contour s, it is necessary to take this integral between the limits determined by the two elements ab, cd of this contour which are within the angle $d\varphi$ of the two planes of which we have just spoken, such that by taking u_1, r_1, and u_2, r_2 to be the values of u and of r relative to these two elements, one obtains

$$\mu g \epsilon' \mathrm{d}^2\sigma' \mathrm{d}\varphi\left(\frac{u_2^2}{r_2^3} - \frac{u_1^2}{r_1^3}\right)$$

as the sum of all the forces exerted by the element $d^2\sigma'$, on the zone parallel to the x axis.

If the surface σ, instead of being terminated by a contour, encloses from all sides a space of any shape, the zone of this surface contained in the dihedral angle φ will be closed, and one will have $u_2 = u_1$, $r_2 = r_1$; ensuring that the action exerted on this zone parallel to the x axis will be null, and as a consequence also that which the element $\mathrm{d}^2\sigma'$ exerts on the entire surface σ made up then of similar zones. And since the same thing will take place relative to the forces parallel to the y and z axes, one sees that the assemblage of two surfaces very close to each other, enclosing from all sides a space of any shape, and covered, in the manner that we just described, one of austral fluid, the other of boreal fluid, is without action on a magnetic molecule, in whatever position it may be placed, and as a consequence on a magnet in whatever manner. Recall the preceding expression

$$\mu g \epsilon' \, \mathrm{d}^2\sigma' \left(\frac{u_2^2 \mathrm{d}\varphi}{r_2^3} - \frac{u_1^2 \mathrm{d}\varphi}{r_1^3}\right),$$

and it will be easy for us to see that, in order to have the total sum of the forces parallel to the x axis that the element $\mathrm{d}^2\sigma'$ exerts on the entire surface σ, one must integrate, with respect to φ, the two parts that make up this expression, respectively in the two portions $\mathtt{A}ab\mathtt{B}$, $\mathtt{B}ab\mathtt{A}$ of the contour s determined by the two tangent planes $p'm'\mathtt{A}, p'm'\mathtt{B}$, determined by the line $m'p'$. But this becomes the same as integrating $\mu g \epsilon' \, \mathrm{d}^2\sigma' \frac{u^2 \mathrm{d}\varphi}{r^3}$ over the entire range of the circuit s; since if one puts for u and φ their values as functions of r deduced from the equations of the curve s, one sees that in passing from the part $\mathtt{A}ab\mathtt{B}$ to the part $\mathtt{B}cd\mathtt{A}$, $\mathrm{d}\varphi$ the sign changes, and that as a consequence the elements of one of these parts are of the contrary sign from the others.

Following this, if we designate by $\mathtt{X}$ the sum of these forces parallel to x which influence the element $\mathrm{d}^2\sigma'$ on the assemblage of the two surfaces terminated by the same contour s, we have

$$\mathtt{X} = \mu g \epsilon' \mathrm{d}^2\sigma' \int \frac{u^2 \mathrm{d}\varphi}{r^3},$$

or, which is the same thing,

$$\mathtt{X} = \mu g \epsilon' \mathrm{d}^2\sigma' \int \frac{(y - y')\mathrm{d}z - (z - z')\mathrm{d}y}{r^3},$$

the x, y, z are only relative to the contour s.

One will have, just the same, designating by $\mathtt{Y}$ and $\mathtt{Z}$ the sums of the forces parallel to y and to z which act on the same assembly of surfaces,

$$\begin{aligned}\mathtt{Y} &= \mu g\epsilon' \mathrm{d}^2\sigma' \int \frac{v^2 \mathrm{d}\chi}{r^3} = g\mu\epsilon' \mathrm{d}^2\sigma' \int \frac{(z-z')\mathrm{d}x - (x-x')\mathrm{d}z}{r^3},\\ \mathtt{Z} &= \mu g\epsilon' \mathrm{d}^2\sigma' \int \frac{w^2 \mathrm{d}\psi}{r^3} = g\mu\epsilon' \mathrm{d}^2\sigma' \int \frac{(x-x')\mathrm{d}y - (y-y')\mathrm{d}x}{r^3}.\end{aligned} \quad (1)$$

Since all the elementary forces which the element $\mathrm{d}^2\sigma'$ exerts on these surfaces pass through the point m' where it is situated, one sees that all these forces have a unique resultant the direction of which passes through the same point m', and whose components parallel to the axes are $\mathtt{X}, \mathtt{Y}, \mathtt{Z}$. Therefore, the moments of this resultant with respect to the same axes are given by

$$\mathtt{Y}z' - \mathtt{Z}y', \quad \mathtt{Z}x' - \mathtt{X}z', \quad \mathtt{X}y' - \mathtt{Y}x'.$$

Suppose now that instead of these forces one applies at the middle of each of these elements $\mathrm{d}s$ of the contour s a force equal to $\mu g\epsilon' \mathrm{d}^2\sigma' \frac{\mathrm{d}s \sin\theta}{r^2}$, and perpendicular to the plane of the sector which has $\mathrm{d}s$ as its base, the point m' as its top, and such that the area is $\frac{1}{2} r\,\mathrm{d}s \sin\theta$. The three components of this force with be respectively equal to

$$\mu g\epsilon' \mathrm{d}^2\sigma' \frac{u^2 \mathrm{d}\varphi}{r^3}, \quad \mu g\epsilon' \mathrm{d}^2\sigma' \frac{v^2 \mathrm{d}\chi}{r^3}, \quad \mu g\epsilon' \mathrm{d}^2\sigma' \frac{w^2 \mathrm{d}\psi}{r^3},$$

parallel to those which pass through the element $\mathrm{d}^2\sigma'$ and point in the same direction, we will have the same values for the three forces $\mathtt{X}, \mathtt{Y}, \mathtt{Z}$ which tend to move the circuit s; but the sums of the rotational moments which result, instead are given by

$$\mu g\epsilon' \mathrm{d}^2\sigma' \left(z' \int \frac{v^2 \mathrm{d}\chi}{r^3} - y' \int \frac{w^2 \mathrm{d}\psi}{r^3} \right), \quad \mu g\epsilon' \mathrm{d}^2\sigma' \left(x' \int \frac{w^2 \mathrm{d}\psi}{r^3} - z' \int \frac{u^2 \mathrm{d}\varphi}{r^3} \right),$$

$$\mu g\epsilon' \mathrm{d}^2\sigma' \left(y' \int \frac{u^2 \mathrm{d}\varphi}{r^3} - x' \int \frac{v^2 \mathrm{d}\chi}{r^3} \right),$$

will be

$$\mu g\epsilon' \mathrm{d}^2\sigma' \left(\int \frac{z v^2 \mathrm{d}\chi}{r^3} - \int \frac{y w^2 \mathrm{d}\psi}{r^3} \right), \quad \mu g\epsilon' \mathrm{d}^2\sigma' \left(\int \frac{x w^2 \mathrm{d}\psi}{r^3} - \int \frac{z u^2 \mathrm{d}\varphi}{r^3} \right),$$

$$\mu g\epsilon' \mathrm{d}^2\sigma' \left(\int \frac{y u^2 \mathrm{d}\varphi}{r^3} - \int \frac{x v^2 \mathrm{d}\chi}{r^3} \right),$$

It appears at first that change should result in action exerted on the contour s, but it is not like that provided that the contour forms a closed circuit, since if one subtracts the first sum of the moments, relative to the x axis for example, from the fourth which refers

(1) It is unnecessary to remark that these $\mathtt{X}, \mathtt{Y}, \mathtt{Z}$ express forces entirely different from those that we have already designated by the same symbols, since they casue mutual action of two elements of voltaic circuits.

to the same axis, while paying attention that x', y', z' should be considered as constants in these integrations, one obtains

$$\mu g\epsilon' \mathrm{d}^2\sigma' \int \frac{(z-z')v^2\mathrm{d}\chi - (y-y')w^2\mathrm{d}\psi}{r^3} =$$
$$\mu g\epsilon' \mathrm{d}^2\sigma' \int \frac{(z-z')^2\mathrm{d}x - (z-z')(x-x')\mathrm{d}z - (y-y')(x-x')\mathrm{d}y + (y-y')^2\mathrm{d}x}{r^3} =$$
$$\mu g\epsilon' \mathrm{d}^2\sigma' \int \frac{\big[(z-z')^2 + (y-y')^2\big]\mathrm{d}x - (x-x')\big[(z-z')\mathrm{d}z + (y-y'))\mathrm{d}y\big]}{r^3} =$$
$$\mu g\epsilon' \mathrm{d}^2\sigma' \int \frac{\big[r^2 - (x-x')^2\big]\mathrm{d}x - (x-x')\big[r\mathrm{d}r - (x-x')\mathrm{d}x\big]}{r^3} =$$
$$\mu g\epsilon' \mathrm{d}^2\sigma' \int \left[\frac{r\mathrm{d}x - (x-x')\mathrm{d}r}{r^2}\right] = \mu g\epsilon' \mathrm{d}^2\sigma' \left(\frac{x_2 - x')}{r_2} - \frac{x_1 - x'}{r_1}\right),$$

by naming x_1, x_2, and r_1, r_2 the values of x and of r at the two extremities of the arc s for which one calculates the value of the difference of the two moments. If this arc forms a closed circuit, it is evident that $x_2 = x_1, r_2 = r_1$, which results in the integral so obtained to be null; therefore one obtains

$$\mu g\epsilon' \mathrm{d}^2\sigma' \int \frac{zv^2\mathrm{d}\chi - yw^2\mathrm{d}\psi}{r^3} = \mu g\epsilon' \mathrm{d}^2\sigma' \left(z' \int \frac{v^2\mathrm{d}\chi}{r^3} - y' \int \frac{w^2\mathrm{d}\psi}{r^3}\right).$$

We find by a similar calculation that the moments relative to the other two axes are the same, for a closed circuit, if one supposes that the direction of the forces

$$\mu g\epsilon' \mathrm{d}^2\sigma' \frac{u^2\mathrm{d}\varphi}{r^3}, \quad \mu g\epsilon' \mathrm{d}^2\sigma' \frac{v^2\mathrm{d}\chi}{r^3}, \quad \mu g\epsilon' \mathrm{d}^2\sigma' \frac{w^2\mathrm{d}\psi}{r^3}$$

passing through the element $\mathrm{d}^2\sigma'$ or through the milieu of $\mathrm{d}s$; where it follows that in these two cases the action on the contour s is exactly the same, this contour being invariably bound to the two very close surfaces which it terminates : the action on these two surfaces by the element $\mathrm{d}^2\sigma'$ thus reduces, provided that the contour s is a closed curve, to forces applied as we just said to each of the elements of this contour, those that act on the element $\mathrm{d}s$ have as value

$$\mu g\epsilon' \mathrm{d}^2\sigma' \frac{\mathrm{d}s \sin\theta}{r^2}.$$

The force applied on the milieu o of the element $ab = \mathrm{d}s$, which is proportional to $\mathrm{d}s \sin\theta$ divided by the square of the distance r of this element from the point m', and whose direction is perpendicular to the plane which passes through the element ab and through the point m', is precisely that which acts, as we have seen, on the element $\mathrm{d}s$ the extremity of an indefinite electrodynamic solenoid if one places this extremity at the point m'; this is also what is produced, based on the last experiments by M. Biot, by the mutual action of an element ab, and of a magnetic molecule located in m'.

But in giving to this force the same value and the same direction perpendicular to the plane $m'ab$, which one should give it as one determined it, as I have done, by replacing the magnetic molecule by the extremity of an indefinite solenoid, M. Biot assumed that it is in m' that its point of application, or rather that of the force equal and opposed that the

element $\mathrm{d}s$ exerts on the point m', since it is at this last with which the experiments which he made agree; instead of the direction of the force exerted by this element on the extremity situated in m' by an indefinite solenoid should pass through the point o, like that which the solenoid exerts on the element, when one determines this force from my formula. Thus, keeping the notation which we have used, and by representing, to abbreviate, the constant coefficient $g\mu\epsilon'\mathrm{d}^2\sigma'$ by ρ, the sums of the moments, following the manner in which M. Biot places the points of application of the forces, would for the three axes, and by changing the signs, will yield the forces which act on the point m',

$$-\rho\int\frac{z'v^2\mathrm{d}\chi-y'w^2\mathrm{d}\psi}{r^3},$$

$$-\rho\int\frac{x'w^2\mathrm{d}\psi-z'u^2\mathrm{d}\varphi}{r^3},$$

$$-\rho\int\frac{y'u^2\mathrm{d}\varphi-x'v^2\mathrm{d}\chi}{r^3};$$

if one takes the points of application as I have found them, one obtains for the sums of the moments

$$-\rho\int\frac{zv^2\mathrm{d}\chi-yw^2\mathrm{d}\psi}{r^3},$$

$$-\rho\int\frac{xw^2\mathrm{d}\psi-zu^2\mathrm{d}\varphi}{r^3},$$

$$-\rho\int\frac{yu^2\mathrm{d}\varphi-xv^2\mathrm{d}\chi}{r^3}.$$

But we have just seen that these last values are respectively equal to the three preceding ones, when the portion of the conductor forms a closed circuit; where this is the case, an experiment cannot determine if the point of application of the forces is really at the point m' or in the milieu o of the element $\mathrm{d}s$. And as, in those done by the skillful physicist to whom we owe the experiments which are here in question, there was in effect a closed circuit, composed of two rectilinear portions forming an angle to which he gave successively different values, of the rest of the conducting wire and to the battery, that he caused to act on a small magnet, in order to deduce the relation of the corresponding forces for various values of this angle the number of oscillations of the small magnet, during a given time, which corresponded to various values; therefore, the results of these experiments made in this manner should have been identically the same, whether one assumes that the point of application of the forces in o or in m', cannot serve to decide which of these two hypotheses should be preferred, this question about the situation of the point of application can only be resolved by other considerations; this is why I think that it is necessary, before going further, to examine this in some detail.

It is in the Treatise that I read at the meeting of 4 December 1820, that I communicated to the Académie the fundamental formula of all the theory explained in this Treatise, a formula which gives the value of the mutual action of two conducting wires expressed as :

$$\frac{ii'\mathrm{d}s\,\mathrm{d}s'(\sin\theta\sin\theta'\cos\omega+k\cos\theta\cos\theta')}{r^2}(1),$$

(1) Journal de physique, tome xci, page 226–230.

k being a constant, for which I have since determined the value, by proving, by other experiments, that it is equal to $-\frac{1}{2}$.

20. Examination of the three hypotheses that are proposed concerning the nature of the interaction of a wire conductor element and what one calls a *magnetic molecule*

Sometime later, in the meeting of the 18th of the same month, M. Biot read a paper in which he described the experiments which he conducted on the oscillations of a small magnet under the action of an angular conductor, and where he concluded from these experiments, due to the error in calculation shown above, that the action of each element of the conductor on that which one calls a magnetic molecule, is represented by a force perpendicular to the plane defined by the molecule and by the element, by reason of the inverse square of their distance, and proportional to the sine of the angle determined by the line which measures this distance and the direction of the element. One sees from the preceding calculations, that this force is exactly that which my formula gives for the mutual action of an element of conducting wire and the extremity of an electrodynamic solenoid, and which is also that which results from Coulomb's law, in the hypothesis of two magnetic fluids, when one looks for the action which takes place between a magnetic molecule and the contour elements which terminate two very close surfaces, one covered by an austral fluid, the other of boreal fluid, by supposing that the molecules of these fluids are distributed on the two surfaces as I have just explained.

In the two ways of conceiving of these things, one finds the same values for the three components, parallel to the three axes chosen at will, of the resultant of all the forces exerted by the contour elements, and, for each of these forces, the action is opposed to the reaction following the straight lines which join, pair by pair, the points between which they are exerted; it is the same for the resultant itself and of its reaction. But in the first case, the point O (Pl. 2 pg. 114, fig. 36 pg. 129) represents the extremity of the solenoid to which the points P,N belong, and o being where the element is situated, the two equal and opposite forces $og, o\gamma$ pass through this element; in the second case, on the contrary, it is in O that one must conceive to place the contour element of the surfaces covered by magnetic molecules P,N, and in o the molecule on which these surfaces act, to ensure that the two equal and opposed forces pass by the molecule. Since one admits that there could be no action of one material point on another, without that it reacts on the first with a force equal and directed in the contrary direction following the same line, which leads to the same condition relative to the action and to the reaction of two systems of always connected points, one has only to choose between these two hypotheses. And due to the experiments by M. Faraday, on the rotation of a piece of conductng wire about a magnet, is, as I will shortly explain, in manifest contradiction with the first, there is no further difficulty in viewing, with me, as the only one admissible the one that passes through the center of the element the line along which the two forces are directed. But many physicists imagine that, in the mutual action of one element AB (Pl. 2 pg. 114, fig. 39 pg. 130) of a conducting wire and of a magnetic molecule M, the action and reaction, though equal and directed in opposite directions, will not follow the same line, but will follow two parallel lines, such that, the molecule M, acting on the element AB, tends to move it following the line OR directed by the middle O of the element AB perpendicularly to the plane MAB, and that the action which acts reciprocally to this element on the molecule M will tend to carry it, with an equal force, in the direction

MS parallel to OR.

It would result from this singular hypothesis, if it were true, that it would be mathematically impossible ever to return the phenomena produced by the mutual action of a conducting wire and a magnet to the acting forces, like all those that one has known up to the present to exist in nature, in such a manner that the action and the reaction are equal and opposite in the direction of the lines which join in pairs the points between which they act; because, in all cases where this condition is satisfied for any elementary forces, it is evident, following the principle of the composition of forces, for their resultants. Also, the physicists who have adopted this opinion are forced to admit a real elementary action, made up of two equal forces directed in opposite directions following two parallel lines, and thus forming a primitive couple, which cannot be directed toward the forces for which the action and the reaction will be opposed following the same line. I have always viewed the hypothesis of primitive couples as absolutely contrary to the first laws of mechanics, among which one should count, with Newton, the equality of action and reaction acting in opposite directions following the same line; and I have considered the phenomena which one observes when a conducting wire and a magnet react one on the other, as all the other electrodynamic phenomena, an action between two current elements, from which two equal and opposite forces result, both determined by the line which joins the two elements. This basic characteristic of other forces observed in nature is found to be justified; and when for those which consist of those where the forces that one considers as real elementary or in other words simply functions of the distances of the points between which they exert, nothing opposes, as I have already remarked, that the force, of which I have determined the value by precise experiments, can not be reduced one day to elementary forces which also satisfy the second condition, provided they enter continuous movement into the calculation, in the conducting wires, the electric molecules for which these last forces are inherent. The consideration of these motions necessarily introduces in the values of the force which results between two elements, in addition to their distance, the angles which determine the directions following which the electric molecules move, and on which depend the directions of these elements themselves; these are exactly the angles, or, what leads to the same, the differentials of the distance of the two elements considered as a function of the arcs formed by the conducting wires, which enter only with the distance in my formula. It should not be forgotten that, in the manner of conceiving the things that which seemed to me only admissible, the two equal and opposite forces OR and OT are the resultants of an infinity of forces equal and opposite pair by pair; OR is that of the forces On', Op', etc., which all pass through the point O, such that their resultant OR also passes there, but that OT is the resultant of the forces Nn, Pp, etc., exerted by the element AB on the points such that N,P, etc., invariably lies at the extremity M of the electrodynamic solenoid by which I propose to replace it by what one calls a magnetic molecule. These points are very close to M when this solenoid is very small, but they are always distinct, and this is why their resultant OT does not pass through the point M, but through the point O toward which all the forces Nn, Pp, etc., are directed.

One sees, by all that we have said, that keeping equal the two forces that result from the mutual action of a conducting wire and of a magnet, and which act, one on the wire of which the element AB forms a part, and the other on the magnet of which the point M is a part, the same value, and the same direction perpendicular to the plane MAB, one can form three hypotheses on the point of application of these forces : in the first, one supposes that the two forces pass through the point M; in the second, which is the one which results in my formula, the two forces pass through the center O of the element; in the third, where

the forces are OR and MS, that which acts on the element is applied at the point O, and the other at the point M. These three hypotheses are entirely in agreement, 1° with regard to the value of these forces which are equal, in all three, due to the inverse of the square of the distance MO, and by reason direct of the sin of the angle MOB which the line OM which measures this distance made with the element AB; 2° with regard to the direction of these same forces, always perpendicular to the plane MAB which passes through the molecule and through the direction of the element : but with regard to their points of application, they are placed differently for the two forces, in the first two hypotheses; and there is identity between the first and the third only for the forces which act on the magnet, and between the second and the third only for the forces which act on the conductor.

By virtue of the identity of the values and the directions of the forces which exist in the three hypotheses, the components of their resultants, taken parallel to three arbitrary axes, will be the same; but the rotational moments, which depend only on the points of application of these forces, will not, in general, be the same, with regard to the forces which move the magnet, for the first and third, and, with regard to the forces which act on the conducting wire, only for the second and the third.

We have seen that in the case where it is a question of the action of a portion of a conducting wire, forming a closed circuit, the values of the moments are the same, whether one takes, for each element, the point of application of the forces in O or in M; in this case, therefore, it will be, furthermore, identical for the values of the moments in the three hypotheses.

21. Impossibility of producing an indefinitely accelerating movement due to the interaction of a closed rigid circuit and a magnet, or of such a circuit and an electrodynamic solenoid

The motion of a body, such that all the parts are invariably linked together, can depend only on the three components parallel to three axes taken arbitrarily, and the three torques about the same axes; from where it follows that there is complete identity in the three hypotheses for the motion produced, whether in the magnet, whether in the conductor, as long as this forms a rigid and closed circuit. This is the reason for the impossibility of an indefinitely accelerating motion, being in general a necessary result of the first hypothesis, since the elementary forces are here simply functions of the distances of the points within which they interact, it follows evidently that this movement is equally impossible, in the two other hypotheses, only when the conductor forms a rigid and closed circuit.

It is easy to see, for the rest, that the demonstration thus obtained of the impossibility to produce an indefinitely accelerating movement by the mutual action of a rigid and closed electric circuit, and of a magnet, is not only a necessary result of my theory, but it results also, in the hypothesis of primitive couples, that the only value given by M. Biot for the force perpendicular to the plane MAB, as I have directly demonstrated, with all the details that could be desired, in a letter that I wrote on this subject to M. le docteur Gherardi. If therefore on could produce an accelerating movement by action on the magnet by a conductor which forms a rigid and closed circuit, it would not only be my formula which would be defective, but also that given by M. Biot, as all the observations which have since been done have completely demonstrated, and which the physicists who admit the hypotheses of the primitive couples have never contested the correctness.

22. Examination of the different cases where an indefinitely accelerating movement can result from the action that a voltaic circuit, of which a part is movable with respect to the rest of the circuit, exerts on a magnet or on an electrodynamic solenoid

When one makes a portion of the voltaic circuit mobile one should distinguish three cases : that where it forms a nearly closed circuit(1); that where it can only turn about one axis, and has its two extremities in this axis; that where the mobile portion does not form a closed circuit, and where one of its extremities travels at least within a sufficient space to measure that it moves : this last case includes that where this portion is formed by a conducting liquid.

We have just seen that, in the first of the three cases, the movement that acts on the movable portion by the action of a magnet, is identically the same in the three hypotheses, and can never indefinitely accelerate, but tends only to lead the mobile portion to a determined position where it stops in equilibrium after having for some time oscillated about this position in accordance with the acquired speed.

It is the same for the second, which only differs from the first in appearance : since if one adds in the axis, a current, which connects the two extremities of the mobile portion, one will have a closed circuit without having changed anything about the moment of rotation about this axis, because the moments of the forces acting on the added current will necessarily be null; from which it follows that the movement of the mobile portion will be identically the same as that for the closed circuit already obtained.

But when the mobile portion does not form a closed circuit, and if its two extremities are not in an axis about which it is subject to turning, the moments produced by the action, whether of a magnetic molecule, whether of the extremity of an indefinite solenoid, are no longer the same as in the second and the third hypotheses, and have a value different in the first. Taking for the axis the x the line about which one assumes that the mobile portion is connected in a manner such that it can only rotate about this line, and in preserving the designations that we used in the preceding calculations, we conclude that the value of the rotational moment produced by the forces which act on the mobile portion will be

$$\rho \int \frac{z' v^2 \mathrm{d}\chi - y' w^2 \mathrm{d}\psi}{r^3},$$

in the first hypothesis, and

$$\rho \int \frac{z' v^2 \mathrm{d}\chi - y' w^2 \mathrm{d}\psi}{r^3} + \rho \left(\frac{x_2 - x'}{r_2} - \frac{x_1 - x'}{r_1} \right)$$

in the two others.

It is due to this difference in the values of the rotational moments that provides the possibility to show by experiment that the first hypothesis is in contradiction with the facts.

(1) The circuit formed by a mobile portion of conducting wire is never rigorously closed, because it is necessary that its two extremities communicate separately with those of the battery; but it is easy to make the interval which separates them sufficiently small so that one can consider them as if they were exactly closed.

Because if one considers a magnet to be reduced to two magnetic molecules of an infinite force placed at its two poles, and that after having placed a vertical line joining them, one introduces a portion of a conducting wire to be turned around this line taken as the axis of the $x's$, then the two rotational moments relative to the two poles will be given by the preceding formula in y replacing x', y', z', by x'_1, y'_1, z'_1 for one of the poles, and by x'_2, y'_2, z'_2 for the other, taking care to change the sign of one of the moments, the first, for example, since the two poles are necessarily of opposed nature, one austral and the other boreal.

When the two poles are, as we assume here, situated on the axis of x, one has $y'_1 = 0$, $y'_2 = 0$, $z'_1 = 0$, $z'_2 = 0$, and the two rotational moments about the axis of the x become null in the first hypothesis : which was easy to foresee, since under this hypothesis the directions of all the forces applied to the mobile conductor pass through one of the two poles and y meeting the fixed axis, which renders the moments of these forces necessarily null.

In the two other hypotheses, on the contrary, where the directions of the forces pass through the middle of the elements, the parts of the moments equal to those of the first hypothesis are the only ones which disappear; and since after they are deleted, one restores that which remains of each moment, one has

$$\rho\left(\frac{x_2 - x'_2}{r_{2,2}} - \frac{x_1 - x'_2}{r_{1,2}} - \frac{x_2 - x'_1}{r_{2,1}} + \frac{x_1 - x'_1}{r_{1,1}}\right),$$

designating by $r_{2,2}; r_{1,2}; r_{2,1}; r_{1,1}$ the distances of the points such that their abscissas are respectively $x_2, x'_2; x_1, x'_2; x_2, x'_1; x_1, x'_1$. It is easy to see that the four terms of the quantity which is contained between the parentheses in this expression, are precisely the cosines of the angles which form with the axis of the x the lines which measure the distances $r_{2,2}; r_{1,2}; r_{2,1}; r_{1,1}$: which yield the value we just found for the moment produced by the action of the two poles of the mobile conductor, identical to those which we have already obtained for those which result from the action of the same conductor of a solenoid such that the extremities are situated at its poles, and whose electric currents will have an intensity i and respective distances such that one has

$$\frac{\lambda i i'}{2g} = \rho,$$

i' being the intensity of the current in the conductor.

The rotational moment being always null under the first hypothesis, the mobile portion of the voltaic circuit will never turn by the action of a magnet situated, as we have said, on the axis of this magnet; under the two other hypotheses, it should on the contrary turn due to the rotational moment whose value we have just calculated, always the same, under these two hypotheses. M. Faraday, who first produced this movement, as a necessary consequence of the laws which I have established on the mutual action of voltaic conductors, and of the manner in which I considered the magnets as assemblages of electric currents, demonstrating thus the direction of the action exerted by the pole of a magnet on the element of a conducting wire passes in effect through the middle of the element, conforming to the explanation that I have given of this action, and not through the pole of the magnet. Therefore the ensemble of elecrodynamic phenomena can no longer be explained by the substitution of the action of austral and boreal magnetic molecules, distributed in the manner that I just explained on two surfaces very close and terminated by conducting wires of the voltaic

circuit, at the point of the action, expressed by my formula, which expresses the currents in these wires. This substitution cannot be carried out except when it deals with the action of rigid and closed circuits, and its principal utility is to demonstrate the impossibility of an indefinitely accelerating movement, whether by the mutual action of two rigid and closed conductors, or whether by that of such a conductor and a magnet.

Since the magnet is mobile, it is also necessary to distinguish three cases : one where all the parts of the voltaic circuit which can act on this magnet are fixed; one where some parts of the circuit are mobile, but without connection with the magnet, these portions can also be formed by a metallic wire, or by a liquid conductor; finally one where one part of the current passes through the magnet, or through a portion of a conductor connected to the magnet.

In the first case, the total circuit composed of the conductors and the battery, is necessarily closed; and as all its parts are fixed, the three sums of the moments of the forces acting on the points of the magnet which is considered, whether as molecules of austral or boreal fluid, whether as extremities of electrodynamic solenoids, are identical in the three hypotheses, and so are the resultants of the forces; so that the movements caused to the magnet, and all the circumstances of these movements, are precisely the same, whichever of the hypotheses one adopts. It is this which applies, for example, to the duration of oscillations of the magnet, under the influence of this closed and immobile circuit; and it is for this reason that the last experiments by M. Biot, where he found that the force which produces these oscillations is proportional to the tangent of the quarter of the angle formed by the two branches of the conductor that he used, this accords also well with this consequence of my theory that the directions of the forces which act on the magnet pass through the middle of the elements of the conducting wire, with the hypothesis which he adopted and in which he admits that the directions pass through the points of the magnet where he placed the magnetic molecules.

The identity which exists in this case between the three hypotheses shows at the same time the impossibility that the movement of the magnet could accelerate indefinitely, and proves that the action of the voltaic circuit can only tend to direct it to a determined equilibrium.

It seems, at first glance, that the same impossibility should be present in the second case, that which is contrary to experiments, at least when one part of the circuit is formed by a liquid. It is evident, in effect, that the mobility of a portion of the conductor does not prevent that this portion acts at each instant as if it were fixed at the position it occupies at that instant; and we do not see at first how this mobility can change the conditions of movement of the magnet, so that it becomes susceptible to indefinite acceleration whose impossibility is demonstrated when all the parts of the voltaic circuit are immobile.

But, after one examines with some attention what should happen, following the laws of mutual action of a conducting body and a magnet, when the conductor is liquid, and when a vertical magnetic cylinder floats in this liquid, and when the surface of the cylinder is covered with an insulating varnish so that the current cannot pass through it, which takes place in the third case, one recognized quickly how there results from the mobility of the liquid portion of the voltaic circuit that the floating magnet acquires a movement which indefinitely accelerates : it is only necessary to apply to this case the explication that I have given, in the *Annales de chimie et de physique* (tome XX, pag. 68–70), of the same movement, when one assumes that the magnet is not varnished, the currents in the liquid

where it floats traverse it freely.

In effect, this explanation being based on that the portions of the currents which are within the magnet cannot have any action on it, and that those that are within the liquid outside the magnet act entirely to accelerate its movement always in the same direction, it follows necessarily that all that happens in this case should also occur when the insulating substance, which covers the magnet, removes only exactly the portions of the current which produce no action, and which leave in place and act, always in the same manner, those that, being outside the magnet, all tend to accelerate its movement constantly in the same direction. In order that one can better judge that, in effect, that is nothing that needs changing in the explanation that I just discussed, I should repeat it here, as applied to the case where the magnet is covered with an insulating substance. I will assume, for simplicity in the explanation, that one substitute for the magnet an electrodynamic solenoid, whose extremities are at the poles of the magnet, although, according to my theory, it should be considered as a bundle of solenoids. This assumption does not change the effects that are produced, because the currents of mercury act in the same manner and in the same direction on all the solenoids in the bundle, they impose a movement similar to that which they would give to a single one of the solenoids, and one can always assume that these electric currents have sufficient intensity so that the movement will be substantially the same as that of the bundle.

For $\mathtt{ETFT'}$ (Pl. 2 pg. 114, fig. 40 pg. 131) the horizontal section of a glass jar filled with mercury in contact with a ring of copper which provides the interior edge and which communicates with one of the rheophores, the negative rheophore for example, while one inserts the positive rheophore at $\mathtt{P}$; then there form currents in the mercury which flow from the center $\mathtt{P}$ of the ring $\mathtt{ETFT'}$ to its circumference.

Represent the horizontal section of the solenoid by the small circle $etft'$, whose center is at $\mathtt{A}$ and whose circumference $etft'$ is one of the electric currents of which it is composed : by assuming that this current moves in the direction $etft'$, it will be attracted by the currents of mercury such as $\mathtt{PUT}$, which is located at, in the figure, to the right of $etft'$, because the semi-circumference etf, where the current goes in the same direction, is closer than $ft'e$ where it goes in the contrary direction. Set $\mathtt{AS}$ this attraction equal to the difference of the forces exerted by the currents $\mathtt{PUT}$ on the two semi-circumferences, and which necessarily pass by their center $\mathtt{A}$, because the result of the forces which these currents exert on all the elements of the circumference $etft'$ of which they are perpendicular, and are, by consequence, directed following the rays of this circumference. The same current $etft'$ of the solenoid is, on the contrary, pushed by the currents which, like $\mathtt{PU'T'}$, are, in the figure, to the left of the current $etft'$, because they are in the opposite direction in the semi-circumference $ft'e$ the closest to $\mathtt{PU'T'}$. Let $\mathtt{AS'}$ be the repulsion which results from the difference of the actions exerted by the currents $\mathtt{PU'T'}$ on the two semi-circumferences $ft'e$, etf, they will be equal to $\mathtt{AS}$, and form, with the ray $\mathtt{PAF}$, the angle $\mathtt{FAS'} = \mathtt{PAS}$, as all are equal to thew two sides of this ray : the resultant $\mathtt{AR}$ of these two forces will be perpendicular to it; and since it passes through the center $\mathtt{A}$, as well as that its two components $\mathtt{AS}, \mathtt{AS'}$, the solenoid will have no tendency to turn on its axis, as one observes in effect with respect to the floating magnet which represents this solenoid; but it will tend, at each instant, to move following the perpendicular $\mathtt{AR}$ of the ray $\mathtt{PAF}$, and since, when one conducts this experiment with a floating magnet, the resistance of the mercury cancels at each instant the acquired speed, one sees this magnet describe the curve perpendicular to all the lines which pass as $\mathtt{PAF}$ by the point $\mathtt{P}$, that is to say the circumference $\mathtt{ETFT'}$ of which this point is the center.

This outstanding experiment, by M. Faraday, has been explained by the physicists who do not admit the theory, by attributing the movement of the magnet to the rheophore immersed in the mercury at P, to which one ordinarily gives a direction perpendicular to the surface of the mercury. It is true that, in this case, the current in this rheophore tends to carry the magnet in the direction that it actually moves; but it is easy to establish, by comparative experiments, that it is with a force very much too weak to overcome the resistance of the mercury, and produces, despite this resistance, the movement that one observes. I was at first surprised to see that these physicists did not take account of the action that the currents in the mercury would exert in their own theory, my surprise was augmented when I found the cause in a manifest error which is found to be explained in these terms in a publication already cited(1) : ≪The transversal action of this fictitious wire (the electric current which is in the mercury) on the austral magnetism of A (Pl. 2 pg. 114, fig. 43 pg. 132) will tend therefore also to constantly push A from the right to the left of an observer who has his head at C′, and his feet at Z. But the contrary tendency will be exerted on the pole B, and also with an equal energy, if the horizontal line C′FF′Z is found at the height exactly at the center of the bar; so, one summarizes that there will result no translational movement. This will be therefore the only force exerted by CF which determines the rotation of the bar AB.≫ How the author did not see that the actions that the *fictitious wire*, placed as he said, exerts on the two poles of the bar AB, tend to carry it in the same direction, and that they add instead of subtract, since they are of contrary type, their poles are found at the two sides opposite from the wire?

It is important to remark on this subject, that if the parts of the currents, forming a part of those of the mercury, could be found in the interior of the small circle $etft'$ and act on them they would tend to cause rotation about the point P in the contrary direction, and with a force which, instead of being the difference of the actions exerted on the two semi-circumferences etf, $ft'e$, are the sum, because if uv represents one of these portions, it is evident that it attracts the arc utv and repels the arc $vt'u$, from which result two forces which together move $etft'$ in the direction AZ opposite to AR. This circumstance obviously cannot take place with the floating magnet which occupies all the interior of the small circle $etft'$, because by excluding the currents when it is covered by insulating material, and because, in the contrary case, the portions of currents contained in the circle, being in the particles of the magnet invariably lying on those on which they act, the action that they produce is canceled by an equal and opposed reaction; of a kind that there only remain, in the two cases, the forces exerted by the currents of the mercury, which all tend to move the magnet following AR. It is uniquely for this reason that it turns about the point P in this direction, as one is assured by replacing the magnet by a mobile conductor $xzetft'sy$ (Pl. 2 pg. 114, fig. 41 pg. 131), formed of a quite thin copper wire, covered by silk, whose intermediate part $etft'$ is wound in a circle, and whose two extreme portions, tied together with e en z, will, the one ezx connects to x in a cup of mercury communicating with one of the rheophores, and the other $t'sy$ immersed in P (Pl. 2 pg. 114, fig. 40 pg. 131) in the mercury which communicates, as we have said, with the other rheophore : we suspend this mobile conductor in a manner such that the circle $etft'$ (Pl. 2 pg. 114, fig. 41 pg. 131) is very close to the mercury surface, and one sees that it rests immobile, by virtue of the equilibrium which is established between the forces exerted by the portions of the currents contained in the circle $etft$ and those that are due to currents and current portions exterior of the circle. But as soon as you remove the portions of the currents included in the space $etft$ (Pl. 2

(1) Précis élémentaire de physique expérimentale, troisième édition, tome II, page 753.

pg. 114, fig. 40 pg. 131), by inserting in the mercury below the circle $etft$ (Pl. 2 pg. 114, fig. 41 pg. 131) a cylinder of insulating material whose base is such as to imitate that which happens to the floating magnet, one sees it move, like this magnet, in the direction AR. When one leaves the cylinder of insulating material where first was the circle $etft'$, it does not turn indefinitely like the magnet, but stops after a few oscillations, in a position of equilibrium; the difference comes from the fact that the magnet left floating, behind it, fills the space which it occupied at first with mercury, and drives the mercury successively to various places to which it is transported. It is this change in the situation of a part of the mercury which is entrained in the electric currents, and causes, while the total voltaic current is closed, the movement of the magnet continues, which is impossible by the action of a rigid and closed circuit, cannot take place in this case where the closed circuit changes shape by the movement of the magnet itself. To produce this movement by using, instead of the magnet, a mobile conductor as described above, it is necessary, since one has established that it will only move if one removes, by the cylinder of insulating material, the portions of currents interior to the small circle $etft'$, and when one leaves the cylinder in the same place, it stops at a position of determined equilibrium after having oscillated about it, imitating that which takes place when one acts on a floating magnet, by sliding the cylinder of insulating material at the base of the vase, in a manner such that it is always under the circle $etft'$ (Pl. 2 pg. 114, fig. 41 pg. 131), and such that its center always corresponds vertically to that of the circle, the mobile conductor therefore starts to turn indefinitely about the point P (Pl. 2 pg. 114, fig. 40 pg. 131) as does the magnet.

It is, in general, when substituting for magnets mobile conductors wound in a circle, that one can form a correct idea of the causes of the various movements by experiment without recourse to calculation, because this substitution provides the means to vary the conditions in various manners, which are very often impossible to obtain with magnets, and only can clarify the difficulties which are presented by often so complicated phenomena. It is thus, for example, that in what we have just said, it is impossible, with a magnet, to verify this result of the theory, that the portions of currents of mercury could traverse the magnet, and the direction that they should have in the mercury when one removes the magnet, which does not turn about the point P, and that the verification becomes easy when one substitutes for it, as we have said, the mobile conductor shown here (Pl. 2 pg. 114, fig. 41 pg. 131).

The identity of the action that one consistently observes between the movements of a mobile conductor and that of a magnet, in all cases that they are found in the same circumstances, does not permit any doubt, when one has done the preceding experiment, that the magnet will not remain immobile, since it is traversed by the portions of currents interior to the circle $etft'$, if the portions can act on it; and as one sees, on the contrary, that when it is not covered by an insulating material, and that the currents freely traverse it, it moves exactly as when it is and that no portions of currents can penetrate into the interior of this magnet, one has a direct proof of the principle on which rests a part of the explanations that I have given, namely : that the portions of currents which traverse the magnet do not act in any manner on it, because the forces which result from their action on the currents proper to the magnet, or on those that one calls the magnetic molecules, occur between the particles of a same rigid body, are necessarily destroyed by an equal and opposite reaction.

I admit that this experimental evidence of a principle which is nothing else but a necessary consequence of the first laws of mechanics, appears to me completely useless,

since it should have been clear to all the physicists who considered this principle which is one of the foundations of science. I would not have made this remark, if one had not assumed that the mutual action of one element of a conducting wire and of a magnetic molecule, consists of a primitive couple composed of two forces equal and parallel without being directly opposed, by virtue of which a portion of current which is located in a magnet could cause motion; consider contrary to the principle which is here the question, and which is denied by the previous experiment from which there is no action exerted on the magnet by the portions of currents which traverse it when it is not covered by an insulating envelop, since the movement which takes place in this case stays the same if one prevents the currents from traversing the magnet, by enclosing it in the envelop.

It is from this principle that one must start in order to see what phenomena should yield a mobile magnet under the influence of a voltaic current, in the third case which we still remain to consider, where a portion of the current passes through the magnet, or through a portion of a conducting wire which is rigidly bound to it. We will see that when there is a rotational movement of a magnet about a conducting wire, the movement should be the same, and is in effect, as if the current traverses or does not traverse the magnet. But this is not the case when it is a question of continuous rotational movement of a magnet about the line that joins the two poles.

I have demonstrated by theory and by various experiments of diverse kinds whose results always confirmed those of the theory, that the possibility or impossibility of this movement holds uniquely by that a portion of the voltaic circuit that in total is in all its points separated from the magnet, or that what happens, whether in the magnet, or in a portion of the conductor bound invariably with it. In effect, in the first case, the assembly of the battery and the conducting wires forms an always closed circuit, and since all the parts act the same on the magnet, whether they are fixed or mobile; in this last case, they exert, at each instant, precisely the same forces as if they were fixed in the position where they are at that instant. Therefore, we have demonstrated, first synthetically with the aid of considerations which are provided in (Pl. 2 pg. 114, fig. 30 pg. 127) and (Pl. 2 pg. 114, fig. 31 pg. 128), together with direct calculation of the rotational moments, that a closed circuit cannot imprint on a magnet a continuing movement about the line which joins its two poles, whether one considers them, conforming to my theory, as the two extremities of a solenoid equivalent to the magnet, or as two magnetic molecules whose intensity is sufficiently large so that the actions exerted stay the same when one substitutes them for all those of which one regards the magnet as composed under the hypothesis of the two fluids. The impossibility of rotational movement of the magnet about its axis, since the totally closed circuit is everywhere separated, thus is found sufficiently completely demonstrated, not only for the application of my formula for currents of a solenoid substituted for the magnet, but also by taking into consideration a force which will exist between an element of conducting wire and a magnetic molecule perpendicular to the plane which passes through this molecule and in the direction of the magnet, with the reason of the inverse square of the distance, and which is proportional to the sine of the angle composed between the line that measures this distance and the direction of the element. But if one assumes, in this last case, that the force passes through the center of the element, whether it acts on it or reacts on the magnetic molecule, only that it is present, following my theory, with respect to the solenoid, the same movement becomes possible since a portion of the current passes through the magnet, or by a portion of the conductor invariably bound with it; because all the actions exerted by this portion on the particles are destroyed by the equal and opposite

reactions that exert on the same particles, it only remains that the actions exerted by the rest of the total circuit which is not closed, and can as a consequence cause turning of the magnet.

In order to fully understand all that relates to this sort of mobement, conceive that the rod TVUS (Pl. 1 pg. 113, fig. 13 pg. 121), which supports the small cup S in which insert the tip *o* of the mobile conductor *oab*, which is folded about V and U as one sees in the figure, in such a manner as to leave free the portion VU of the line TS taken as the axis of rotation, so that one may suspend the cylindrical magnet GH, by a very thin wire ZK, from the hook K attached to U on this rod, and so that the mobile conductor *oab* is maintained in the position where one sees it in the figure by the counter weight *c*, is terminated at *b* by a copper plate *bef*, which is inserted into the acidic water with which one has filled the vase MN, so that the conductor communicates with the rheophore *p*P inserted into mercury in the cup P, while the other rheophore *r*R is in communication with the rod TVUS through the mercury which one puts in the cup R, and with the battery *pr* closes the total circuit.

At the instant when one establishes the current in the apparatus, one sees the mobile conductor turn about the line TS; but the magnet is only led to a determined position about which it oscillates for some time, and where it then comes to rest. By the principle of the equality of action and reaction, which applies with regard to the rotational moments about a common axis as with regard to the forces, if one represents by M the rotational moment induced, by the action of the magnet, on the mobile conductor *oab*, the reaction of this tends necessarily to cause the magnet to rotate about its own axis with the moment –M, equal to M, but acting in the contrary direction.

The immobility of the magnet obviously derives from that if the mobile conductor *oab* acts on it, the rest *b*MP*pr*RTS of the total circuit can not fail to act equally; the moment of the action that it exerts on the magnet, taken with that of *oab*, is null; from which it follows that the moment of *b*MP*pr*RTS is M, equal and opposed to –M.

But if one connects the magnet GH to the mobile conductor *oab*, there results a system of an invariable form, in which the action and reaction that they exert one on the other mutually cancel; and the system obviously rests immobile, if the part *b*MP*pr* RTS does not act as before on the magnet in order to cause it to turn by imparting to it the rotational moment M. It is due to this moment that the magnet and the mobile conductor, are combined in a system of invariable form, turning about the line TS; and since this moment is, as we just saw, and of the same value and the same sign as that which relates the magnet to the conductor *oab* when the conductor was separated and turned by itself, one sees that these two movements necessarily take place in the same direction, but with speeds which are reciprocally proportional to the moment of inertia of the conductor and to the sum of this moment of inertia and of that of the magnet.

I made an abstraction, in the preceding considerations, of the action exerted by the portion *b*MP*pr*RTS of the total circuit on the mobile conductor *oab*, whether in the case where the conductor is separated from the magnet, or in the case where it is connected, not only because it is very small relative to that which affects the magnet, but because it tends uniquely to carry the mobile conductor into a position determined by the mutual repulsion of the elements of these two portions of the total circuit, and does not contribute, as a consequence, in the two cases, to the rotational movements of *oab*, which can make a small variation of speed; which without this would be constant.

In order to easily unify and separate alternatively the magnet and the mobile conductor,

without interrupting the experiments, it is convenient to fix to the hook Z by which the magnet is suspended by the wire ZK, a piece of copper wire ZX terminated at X by a fork with two branches Xx, Xy encompassing the mobile conductor oab, which is located close between them, when one properly folds the rod ZX; by folding in the contrary direction, one places it where it is shown in the figure, and the conductor again becomes free.

I have explained in detail these experiments, because it seems, more than any other, to support the hypothesis of the primitive couple, when one does not analyze it as I have just done. In effect one accepts as I do, in this hypothesis, that the forces exerted by the magnet GH, on the elements of the mobile conductor oab, pass through these elements, and assuming they are all in the vertical plane TSab, they tend therefore to cause turning of oab always in the same direction about TS : these forces are, after the law proposed by M. Biot, precisely the same, in size, in direction and relatively at their application points, as the forces given by my formula; they produce therefore the same rotational moment M by virtue of which the conductor oab moves if it is free. But, following the physicists who accept the hypothesis here in question, the forces due to the reaction of the elements of the conductor on the magnet are no longer the same in size and for those that are perpendicular to the plane TSab; they think that these forces are applied to the magnetic molecules, or, that which comes to the same, to the two poles of the magnet GH which are on the line TS; thus their rotational moments are null relative to this line. It is due to this cause that they attribute immobility to the magnet when it is not attached to any portion of the voltaic circuit; but to explain the rotational movement of the magnet in the case where one connects to the mobile conductor oab, with the aid of the rod ZX, they assume that the connection of these two bodies into a system of invariable form, does not prevent the magnet to always act to impose on the mobile conductor the same rotational moment M, without that the conductor reacts on the magnet in a manner to prevent movement of the system, which should turn as a consequence in the same direction as the mobile conductor turns before having been rigidly attached to the magnet, but with a speed less than in the reciprocal reason of the moments or inertia of the conductor alone and of the conductor recombined to the magnet.

It is thus that one finds in this hypothesis the same results as when one assumes that the action opposed to the reaction follows the same line, and one takes account of the action exerted on the magnet by the rest bMPprRTS of the voltaic circuit. The result of all that has been demonstrated in this treatise, that this identity of effects produced and the values of the forces that we have found, in the case that we have examined, from the manner that I have explained the phenomena and hypotheses of the primitive couple, is a necessary consequence that the voltaic circuit that one has made act on the magnet is always closed, and since it acts on a closed circuit, not only the three parallel to three axes which result in the action that such a circuit exerts on a magnet, but the same in the two ways of conceiving these things, just as that the movement of the magnet, can only depend on these six quantities.

The same identity is found, as a consequence, in all the experiments of the same type, and it is not, neither form the experiments, neither form the measurement of the forces that develop between the conducting wires and the magnets, that such a question can be decided; it should be by :

1° By the necessity in principle, that the mutual action of the diverse parts of a system of invariable form cannot, in any case, impose on this system an arbitrary movement; a principle which is only a consequence of the same idea that we have of forces and of inertia of matter.

2° From this circumstance, that the primitive couple hypothesis was not imagined, by those who proposed it, that because they had known that the phenomena of which they are part could not be explained otherwise, failing to take into account the action exerted on the magnet by the totality of the voltaic circuit; because they have not paid attention to the fact that the circuit is always closed, and that they did not deduce, as I did, that the law proposed by M. Biot, the rigorous consequence that, for a closed circuit, that the forces and the moments are identically the same, whether one assumes that the directions of the forces acting on the magnet pass through the magnetic molecules or through the centers of the elements of the conducting wires.

3° About this, when one accepts that the phenomena with which we are concerned can be produced, in the final analysis, by forces expressed as functions of the distances exerted by molecules of the two electric fluids, and that one attributes also to the two magnetic fluids when one views them as the cause of the phenomena, purely electric as I think, posed by the magnets, one can well conceive that if these molecules are in movement in the conducting wires, there then results between their elements forces that do not only depend on the distances of these elements, but also on the directions of the movement of the electric molecules in which the currents flow, such are precisely the forces which give my formula, provided that these forces satisfy the condition that the action and the reaction are directed following the same line, whereas it is contradictory to assume that the forces, whatever were otherwise their values as functions of distances, directed following the lines which join the molecules with the ones that they exert, can produce, by any combination whatsoever, since these molecules are in movement, the forces for which the action and reaction are not directed following the same line, but following two parallel lines, as in the primitive couple hypothesis.

One knows, in effect, that whenever electric or magnetic molecules are in movement, they act at each instant as if they were at rest at the point where they are at that instant. If therefore one considers two systems of molecules, such that each molecule of one exerts on each molecule of the other a force equal and opposite, following the line that joins them, to the force exerted by the second molecule on the first, and stop all these molecules in their current location at that instant, one assumes that they are all rigidly connected at this location, there will necessarily be equilibrium in the rigid system, composed of two others, which results from this assumption, since there will be equilibrium between the elementary forces taken pairwise. The resultant of all the forces exerted by the first system on the second will therefore equal and opposed, following the same line, as that of all the forces exerted by the second on the first; and these two resultants can never produce a couple capable of turning the total system, since all of its parts are rigidly bound together, as is assumed by those, while adopting the hypothesis of a couple in the mutual action of one magnetic molecule and of one element of conducting wire, while pretending that this action results that the magnet does not act on the molecule which since it is itself an assemblage of magnetic molecules, whose actions on those which one considers are such that as Coulomb has established, that is to say directed following the lines which join them to this last, and by reason of the inverse square of the distances.

It suffices to read with some care that which M. Biot has written on the phenomena that occupy us, in the ninth book of the third edition of his *Traité élémentaire de physique expérimentale*, to see that after having considered carefully the forces that the elements of conducting wires exert on magnets, as applied to magnetic molecules perpendicular to the planes passing through each element and each molecule, he then assumes, when he

speaks of the movement of conducting wires about magnets, that the forces exerted by the magnetic molecules on the elements of the wires, passing through these elements in the directions parallel to those of the forces exerting on the magnet, and forming, as a consequence, couples with the first, due to their being opposed following the same lines; which he explains in particular on page 754, tome II of this work, the rotational movement of a magnet about its axis, when a portion of the current traverses it, by assuming that the magnet turns due to the action that this portion itself exerts on the rest of the magnet, which forms in the mean time with it a system of fixed form such that all the parties are invariably tied to them (1) : which obviously implies that the action and the reaction of this portion of current and the rest of the magnet form a couple. How from that position can it be imagined that the physicist who admits such a supposition, can express in these terms on page 769 of the same book : ≪ If one calculates the action that acts at a distance on a magnetic needle of infinitely short length and almost molecular, one will easily see that one can form assemblages of such needles, which exert transversal forces. The unique, but without doubt very large, difficulty is in combining of such systems, in a manner that results, for the slices of a conducting wire of considerable dimension, the precise laws of transversal action which experiments show, and that we explained above.≫ Without doubt the action of two systems of small magnets, whose austral and boreal molecules attract or repel by reason of the inverse square of their distances, following the lines which join them in pairs, it could result from *transversal actions*, but not from *actions which are not equal and opposed from the reactions directed following the same lines*, as those supposed by M. Biot.

In one word, the value of the action of two elements of conducting wires, which I have

(1) I do not know if it is necessary to recall on this subject that which I have already remarked elsewhere, namely that the electric fluids, after all the facts, above all after the nullity of the action on the bodies the electrically lightest which move in a vacuum, should be considered as incapable of action due to their mass which one can say is infinitely small with respect to those of ponderable bodies, and which therefore all attraction or repulsion exerted between these bodies and the electric fluids can well put these in motion, but not the ponderable bodies. For these last to move, it is necessary, when it comes to ordinary electric attractions and repulsions, the electricity is retained on their surface, so that the force that overcomes the inertia of one, applies, if one can so express it, on the inertia of the other. It is necessary all the same, for the mutual action of two conducting wires to put these wires in motion, that the decompositions and recombinations of the neutral fluid which is present at each instant in all the elements along the length of the two wires, determine between their ponderable particles the forces capable of overcoming the inertia of their particles in imparting to the two wires the speeds proportionally reciprocal to their masses. When one speaks of the mutual action of two electric currents, one never understood, and it is evident that one cannot understand, other than those of the conductors that they traverse : the physicists who accept magnetic molecules acting on the elements of a conducting wire, conforming to the law proposed by M. Biot, accept without doubt also that this action does not move the wire because the magnetic molecule is retained by the ponderable particles of the magnet which constitutes magnetic element of which it is a part; and it is therefore evident that in assuming that the magnet is moved by the action of the portion of the electric current which traverses it, one necessarily assumes that its movement results from the mutual action which exists between each of those of its particles which traverse the current and all the other particles of the same body.

deduced uniquely from experiments, depends on the angles which determine the respective directions of the two elements : following the law proposed by M. Biot, the force which develops between an element of conducting wire and a magnetic molecule, depends also on the angle which determines the direction of the element. If I called *elementary* the force of which I determined the value, because it is exerted between two elements of conducting wires and because it has not yet been reduced to simpler forces : he has also called *elementary* the force that he introduces between a magnetic molecule and an element of conducting wire. Up to here all is similar with respect to these two sorts of forces; but for those that I have admitted, the action and the reaction are opposed following the same line, and nothing prevents conceiving that they result from attractions and repulsions inherent in the molecules of the two electric fluids, provided that one assumes these molecules in motion in the conducting wires, to give reason for the influence of the direction of the elements of these wires on the value of the force; whereas that M. Biot by admitting a force for which the action and the reaction are no directed in contrary directions on the same line, but on lines parallel and forming a couple, this makes it absolutely impossible to reduce this force to attractions and replusions directed following the lines which join pairwise the magnetic molecules, such are admitted by all the physicists who use this to explain the mutual action of two magnets. Is it not evident that this hypothesis of M. Biot, on the revolving forces for which the action and the reaction are not opposed following a single line, which one should say that which they say (page 771) on the subject of mutual action of two elements of conducting wires, as I have determined by my experiments and the calculations that I derived, namely : that a similar supposition *is firstly itself completely outside the similarities which all the other laws of attraction present to us?* Does there exist a hypothesis more contrary to these similarities, than to imagine forces such that the mutual action of the diverse parts of a system of invariable form can set this system in motion?

There is no point in my thus elaborating one of the laws that Newton viewed as a foundation of the physical theory of the universe, since after having discovered a great number of facts that no one had observed before me, I determined, solely by experiment and following the path traced by this great person, first the laws of electrodynamic action, then the analytic expression of the force that develops between two elements of conducting wires, and finally I deduced from this expression all the consequences expressed in this Treatise. M. Biot, by citing the names of a group of physicists who had observed new facts or invented instruments which were useful in science, mentioned neither the means by which I came to render mobile the portions of conducting wires, by suspending them on steel points in cups filled with mercury, a method without which one can learn nothing of the actions exerted on these wires, whether by other conductors, or whether by the earth or by magnets; nor the apparatus that I constructed to make evident all the circumstances which display these actions, and to precisely determine the equilibrium states from which I concluded the laws to which they are subject; nor these laws themselves as determined by my experiments; nor the formula that I concluded; nor the applications that I made of this formula. And as regards the facts that I was the first to observe, he cites just one, that of the mutual attraction of two conducting wires; and as he cites it, it is to give an explanation which had been first proposed by several foreign physicists, at a time when one had not done the experiments which have demonstrated since long ago that it was completely inadmissible. This explanation consists, as one knows, of assuming that two conducting wires exert one on the other, as they would by virtue of the mutual action of infinitely small magnetic needles, tangent to circular sections that one can make in all the length of the wires assumed to be cylindrical; the ensemble of small needles of one same section form thus a magnetic

ring, similar to that which MM. Gay-Lussac and Velter made use of to carry out, in 1820, a decisive experiment on the subject of the explanation which is here in question. This experiment proved, as one knows, that such a ring exerts absolutely no action, even though it forms a complete circumference, even though it is strongly magnetized and formed from a pure steel to preserve, when one breaks it, all of its magnetism, one finds, in breaking it, that all of the pieces are strongly magnetized.

Sir H. Davy and M. Erman obtained the same result as regards a steel ring of any shape. It is, for the remainder, a necessary consequence of the theory of two magnetic fluids such as mine, thus it is easy to be convinced by a calculation entirely similar to that which I demonstrated, in this Treatise, of the nullity of action of a solenoid forming a closed curve, conforming to that which M. Savary first found, by a calculation which does not differ essentially from mine, and as one can see, whether in the addition which is found at the end of the Treatise on the application of calculations to electrodynamic phenomena, that he published in 1823, or whether in the Journal de physique, tome XCVI, pages 295 et suiv. In giving once again this explanation, M. Biot shows that he does not know either the MM. Gay-Lussac and Velter experiment, nor the calculation of M. Savary.

In addition, the small needles tangent to the circumferences of the sections of the conducting wires, are considered by M. Biot like the particles of the surface of the conducting wire magnetized by the electric current which separates in these particles the austral and boreal fluid, by carrying them in the contrary direction, without that the molecules of these fluids can leave the wire particles where they were originally found combined in the neutral fluid. Therefore, when the current is established after some time in the fluid and continues indefinitely, the distribution of the magnetic molecules in the conducting wires can no longer change; it is thus as if there exists in these wires a multitude of determined points that will not change position as long as the current continues with the same intensity, and which emanate attractive and repulsive forces due to the magnetic molecules, and as a consequence reciprocally proportional to the square of the distance.

Thus two conducting wires do not act one on the other except by virtue of forces expressed as a function of the distances between the points fixed by one of the wires and of the other points equally fixed in the other wire; but then one of the wires, assumed to be fixed, can only direct the other in a situation of equilibrium where the integral of the living forces, which always obtain in functions of the coordinates of the points of the mobile wire when the forces are functions of the distances, attaining its maximum value. Never can such forces produce a rotational movement whose speed will always be in augmentation in the same direction, just as that of this speed becomes constant, because of frictions, or of resistance of the liquid in which it is necessary to insert the mobile conductors to maintain the communications. Now, I have obtained this rotational movement by making to act a spiral conductor, formed close to a circle, on a rectilinear conducting wire, turning about one of its extremities situated at the center of the circle, even though its other extremity is located quite close to the spiral conductor.

This experiment, where the movement is very rapid and can last several hours, when one uses a battery of sufficient strength, is in manifest contradiction to the point of view of M. Biot; and if it is not with the opinion that the action of two conducting wires results in attractive and repulsive forces inherent in the molecules of the two electric fluids, it is that these molecules do not remain circumscribed, like those that one assumes compose the two magnetic fluids, in the very small spaces where their distribution is determined by a permanent cause, but on the contrary they travel all the length of each wire by a sequence

of compositions and decompositions, which succeed each other in very short intervals : from which it can result, as I have observed, movements always continuing in the same direction, incompatible with the supposition that the points from which the attractive and repulsive forces emanate do not change position in the wires.

Finally, M. Biot repeats in the third edition of his Traité élémentaire de physique (tome II, page 773), that which he already said in the note which he published, in the Annales de chimie et de physique, on the first experiments relative to the subject which we have addressed, that he made with M. Savary, it is known : that when an element of a very thin conjunctive and indefinite wire acts on a magnetic molecule, ≪ the nature of its action is the same as that of a magnetic needle which is placed on the contour of the wire in a direction determined and always constant with respect to the direction of the voltaic current.≫ However the action of this needle on a magnetic molecule is directed following the same line as the reaction of the molecule on the needle, and it is anyhow easy to see that the force which results is by reason of inverse of the cube, and not of the square of the distance, as M. Biot found himself is the that of the element of the wire.

23. Identity of the mutual interaction of two closed electric circuits and of two assemblages each composed of two very closely spaced surfaces terminated by the circuit corresponding to each assemblage, and on which are distributed and fixed two magnetic fluids, austral and boreal, in such a manner that the magnetic intensity is everywhere the same

It remains for me to extend to the mutual action of two close circuits, of arbitrary size and shape, the considerations relative to surfaces terminated by these circuits and thus whose points act as so-called molecules of austral fluid and of boreal fluid, which I have previously applied to the mutual action of a arbitrary closed circuit and of an element of conducting wire. I have found that the action of the element $\mathrm{d}^2\sigma'$ on the two surfaces terminated by the contour s, are expressed by the three forces

$$\mu g\epsilon'\mathrm{d}^2\sigma'\frac{u^2\mathrm{d}\varphi}{r^3},\ \ \mu g\epsilon'\mathrm{d}^2\sigma'\frac{v^2\mathrm{d}\chi}{r^3},\ \ \mu g\epsilon'\mathrm{d}^2\sigma'\frac{w^2\mathrm{d}\psi}{r^3},$$

applied to each of the elements $\mathrm{d}s$ of this contour, I will now apply to the circuit s', what I have done before with regard to the circuit s. For this consider a new surface terminated on all sides, like for surface σ', by the closed curve s', and is such that the portions of the normal of the surface σ' comprised between it and this new surface, are everywhere very small. Assume, on the new surface, fluid of type contrary to that of the surface σ', in such a manner that the quantities of the two fluids in the corresponding parts of the two surfaces are the same. Designating by ξ', η', ζ' the angles that the normal at the point m', whose coordinates are x', y', z', forms with the three axes, and by h' the small portion of this normal which is located between the two surfaces, we can, as we have done for the element $\mathrm{d}^2\sigma'$, recover the action of the element of the new surface which is represented by $\mathrm{d}^2\sigma'$, on the ensemble of the two surfaces which are terminated by the contour s, by the applied forces, as one has seen, on page 76, for various elements of the contour; those which are relative to the element $\mathrm{d}s$ and parallel to x are obtained by substituting in the expression which we found for this force

$$\mu g\epsilon'\mathrm{d}^2\sigma'\frac{u^2\mathrm{d}\varphi}{r^3}$$

or

$$-\mu g\epsilon' \,\mathrm{d}^2\sigma' \frac{(y'-y)\mathrm{d}z-(z'-z)\mathrm{d}y}{r^3},$$

the new coordinates $x'+h'\cos\xi',\ \ y'+h'\cos\eta',\ \ z'+h'\cos\zeta'$ in place of x', y', z'. Since the forces thus obtained act in the sense contrary to the first, it is necessary to subtract them, which results in, if one neglects in the calculation the powers of h greater than the first, differentiating

$$-\mu g\epsilon' \,\mathrm{d}^2\sigma' \frac{(y'-y)\mathrm{d}z-(z'-z)\mathrm{d}y}{r^3},$$

by varying x', y', z', replacing $\delta x', \delta y', \delta z'$ by $h'\cos\xi', h'\cos\eta, h'\cos\zeta$, and changing the sign of the result, while x, y, z, and $\mathrm{d}x, \mathrm{d}y, \mathrm{d}z$, should be considered as constants since they belong to the element $\mathrm{d}s$.

The formula into which one should substitute $h'\cos\xi', h'\cos\eta, h'\cos\zeta$, à $\delta x', \delta y', \delta z'$ is therefore

$$\mu g\epsilon'\left(\mathrm{d}z\,\mathrm{d}^2\sigma'\delta'\frac{y'-y}{r^3}-\mathrm{d}y\,\mathrm{d}^2\sigma'\delta'\frac{z'-z}{r^3}\right),$$

which must be integrated after this substitution over all the extent of the surface σ' to have the total action of this surface and of that with which it is joined over the assemblage of the two surface terminated by the contour s. On can carry out this double integration separately on each of the two terms since this expression composes. Carry out first that which is relative to the first term

$$\mu g\epsilon'\mathrm{d}z\,\mathrm{d}^2\sigma'\delta'\frac{y'-y}{r^3}.$$

For this, decompose the surface σ' into an infinity of infinitely narrow zones by a series of perpendicular planes in the plane of the xz determined by the y coordinate of the center o of the element $\mathrm{d}s$. We take, on one of these zones, for $\mathrm{d}^2\sigma'$ the element of the surface σ' which has the expression

$$\frac{v\,\mathrm{d}'v\,\mathrm{d}'\chi}{\cos\eta'},$$

and we have thus to integrate the quantity

$$\mu g\epsilon'\,\mathrm{d}z\frac{v\mathrm{d}'v\,\mathrm{d}'\chi}{\cos\eta'}\delta'\frac{y'-y}{r^3},$$

which changes, by a transformation exactly similar to that which we used above relative to

$$\mathrm{d}^2\sigma=\frac{u\mathrm{d}u\,\mathrm{d}\varphi}{\cos\xi},$$

in this

$$-\mu g\,\mathrm{d}z\,h'\epsilon'\mathrm{d}'\chi\mathrm{d}'\frac{v^2}{r^3}.$$

Assuming, as we did for the surface σ, that the quantities h', ϵ' vary together in a manner such that their product maintains a constant value g', one integrates this last expression, assuming the angle χ to be constant, within all the length of the zone enclosed on the

surface σ' between the two planes which include the angle $\mathrm{d}'\chi$ from one of the borders of the contour s' up to the other. This first integration can be done immediately and gives

$$-\mu g g' \mathrm{d}z\, \mathrm{d}'\chi \left(\frac{v_2^2}{r_2^3} - \frac{v_1^2}{r_1^3} \right),$$

r_1, v_1 andr_2, v_2 represent the values of r and of v for the two edges of the contour s'. The two parts of this expression must now be integrated with respect to χ respectively in the two portions of the contour s' determined by the two tangent planes of this contour determined by the y ordinate of the element $\mathrm{d}s$; and after our remark on page 75, with respect to the value of the force parallel to x in the calculation relative to the two surfaces terminated by the contour s, it is easy to see that one has here

$$-\mu g g' \mathrm{d}z \int \frac{v^2 \mathrm{d}'\chi}{r^3},$$

in taking this integral over the total extent of the closed contour s'; the variables r, v and χ are only relative to this contour.

One executes in the same manner the double integration of the other term which is equal to

$$-\mu g \epsilon' \mathrm{d}y \mathrm{d}^2\sigma' \delta' \frac{z' - z}{r^3}$$

over the entire extent of the surface σ'. It is necessary, for this, to divide this surface into an infinity of zones, by planes determined by the z coordinate at the center of the element $\mathrm{d}s$, and take, on one of these zones, for $\mathrm{d}^2\sigma'$ an infinitely small area which has as its expression $\frac{w \mathrm{d}' w \mathrm{d}' \psi}{\cos \zeta'}$. The formula, after having been transformed as previously, is integrated first over all the length of the zone; the integral will only contain quantities relative to the contour s'. Then the second integration with respect to ψ over the extent of the closed contour s', gives

$$\mu g g' \mathrm{d}y \int \frac{w^2 \mathrm{d}'\psi}{r^3}.$$

Finally, bringing together the two results obtained by the double integrations, one obtains

$$\mu g g' \left(\mathrm{d}y \int \frac{w^2 \mathrm{d}'\psi}{r^3} - \mathrm{d}z \int \frac{v^2 \mathrm{d}'\chi}{r^3} \right)$$

for the value of the force parallel to x, whose direction passes through the middle of the element $\mathrm{d}s$, and which derives from the action of the two surfaces terminated by the contour s' on the two surfaces terminated by the contour s.

One obtains similarly, parallel to the two other axes, the forces

$$\mu g g' \left(\mathrm{d}z \int \frac{u^2 \mathrm{d}'\varphi}{r^3} - \mathrm{d}x \int \frac{w^2 \mathrm{d}'\psi}{r^3} \right),$$

$$\mu g g' \left(\mathrm{d}x \int \frac{v^2 \mathrm{d}'\chi}{r^3} - \mathrm{d}y \int \frac{u^2 \mathrm{d}'\varphi}{r^3} \right).$$

24. Impossibility of producing an indefinitely accelerating movement by the interaction of two rigid and closed electric circuits and, consequentially, by any assemblages of circuits of this kind

Thus, by assuming the application to each element $\mathrm{d}s$ of the contour s the forces which we just determined, one obtains the action which results in attractions and repulsions of the two magnetic fluids, distributed and fixed on the two assemblies of surfaces terminated by the two contours s, s'.

But these forces applied to elements $\mathrm{d}s$ only differ in sign from those that we have obtained on page 72, for the action of two circuits s, s', by assuming they are traversed by electric currents, provided we have $\mu g g' = \frac{1}{2} i i'$. This difference comes about in the calculation that we gave, the differentials $\mathrm{d}'\varphi, \mathrm{d}'\chi, \mathrm{d}'\psi$ were assumed to have the same sign as the differentials $\mathrm{d}\varphi, \mathrm{d}\chi, \mathrm{d}\psi$, whereas they should be taken with opposite signs when the two currents move in the same direction; therefore the forces produced by the mutual action of these currents are exactly the same as those which result from the action of two surfaces σ' on the two surfaces σ, and it is thus completely demonstrated that the mutual action of two rigid and closed circuits, carrying electric currents, can be replaced by those of two assemblages each composed of surfaces having as contours these two circuits, and on which are fixed molecules of austral and boreal fluids attracting and repelling following the straight lines which join them, based on the inverse square of the distances. Combining this result with the rigorous consequence of the general principle of the conservation of living forces, already referred to several times in this publication, that all action which is reducible to these forces, functions of distances, acting between the material points which form two rigid systems, one fixed, the other mobile, can never give rise to a movement which continues indefinitely, despite the resistances and the frictions which affect the mobile system, we thus conclude, as we did when it acted on a magnet and a closed and rigid voltaic circuit, that this sort of movement can never result from *mutual action of two rigid and closed circuits.*

Instead of substituting for each circuit two surfaces very close to each other one covered by austral fluid and the other by boreal fluid, these fluids being distributed as stated above, one could replace each circuit by a single surface on which are uniformly distributed magnetic elements such as were defined by M. Poisson, in the Treatise read to the Académie des Sciences on 2 February 1824.

The author of this Treatise, in calculating the formulas by which he entered into the field of analyzing all issues related to the magnetization of bodies, whatever the cause that one assigns to them, has given(1) the values of the three forces exerted by a magnetic element on a molecule of austral or boreal fluid; these values are identical to those that I deduced from my formula, for the three quantities A,B,C, in the case of a very small closed and plane circuit, when one assumes that the constant coefficients are the same, and it is easy to conclude a theorem from which one sees immediately :

1° That the action of an electrodynamic solenoid, calculated from my formula, is, in all cases, the same as that of a series of magnetic elements of the same strength, distributed uniformly along a straight or curved line which encloses all the small circuits of the solenoid, by giving, to each of these points, on the axes of the elements, the same direction of this line.

(1) Treatise on the theory of magnetism, by M. Poisson, page 22.

2° That the action of a rigid and closed voltaic circuit, calculated as well following my formula, is precisely that which would be exerted by magnetic elements of the same strength, distributed uniformly on an arbitrary surface terminated by the circuit, when the axes of the magnetic elements are everywhere normal to this surface.

The same theorem leads also to the consequence, that if one imagines a surface enclosing on all sides a very small space; that one assumes, on one part, molecules of austral fluid and of boreal fluid in equal quantities distributed on the small surface, as they should be so that they constitute a magnetic element such as that considered by M. Poisson, and, on the other part, the same surface covered by electric currents, forming on this surface small circuits closed in planes parallel and equidistant, and that one calculates the action of these currents from my formula, the forces exerted, in the two cases, whether on an element of conducting wire, whether on a magnetic molecule, are precisely the same, independent of the form of the small surface, and proportional to the volume that they enclose, the axes of the magnetic elements being represented by the line perpendicular to the planes of the circuits.

The identity of these forces once demonstrated, can be considered as having as simple corollaries, all the results that I have given in this Treatise, on the possibility of substituting for magnets, without changing the produced results, assemblies of electric currents which form circuits which enclose their particles. I think that it would be easy for the reader to deduce this consequence, and the theorem on which it is based, by the preceding calculations; I have also developed them in another essay where I discussed at the same time, under this new point of view, all that is relative to the mutual action of a magnet and a voltaic conductor.

25. Experiments which confirm the theory which attributes the properties of magnets to electric currents, proving that a spiral or helical conducting wire carrying a current, attached to a moving metallic disc shows a movement exactly like that discovered by M. Arago between a disc and a magnet

While I was writing this, M. Arago discovered a new type of action on magnets. This discovery, equally as important as unexpected, consists of the mutual action which develops between a magnet and a disk or ring of any substance, when the relative positions continually change. M. Arago had the idea that one should be able, in this experiment, to substitute a conductor wound in a helix for the bar magnet, and he engaged me to verify this conjecture by an experiment the success of which could not be doubted. Defects in the equipment that I used, with M. Arago, to verify the existence of this action prevented us from obtaining a decisive result; but, M. Colladon having agreed to improve the equipment that we used, I verified with him in a complete manner, today 30 August 1826, M. Arago's idea, by use of a very short double helix which has turns of about two inches in diameter.

This experiment completes the identity of the effects produced, whether by magnets, or by assemblies of electric circuits both rigid and closed(1); it demonstrates that the series

(1) It seems at first that this identity ought only to take place with respect to closed voltaic circuits of very small diameter; but it is easy to see that it is also true of circuits of arbitrary magnitude since, as we have seen, they may be replaced by magnetic elements distributed uniformly over surfaces terminated by these circuits, and the number of surfaces that a particular circuit circumscribes can be multiplied at will. The set of surfaces may be

of decompositions of neutral fluid, which constitutes electrical current, suffices to produce, in this case as in all the others, the effects that one ordinarily explains by the action of two fluids different from electricity, and that one designates by the names *austral fluid* and *boreal fluid.*

26. General consequences of these experiments and calculations relative to electrodynamic phenomena.

After long reflection about these phenomena and after the ingenious explanation that Mr. Poisson has recently given for the new kind of action discovered by Mr. Arago, I think that we can accept that the most likely current state of science, consists of following propositions.

1° Without our being allowed to reject explanations based on the reaction of the ether set in motion by electric currents, there is no need, up to now, to resort to them.

2° Molecules of the two electrical fluids, distributed on the surface of conductors, on

---

regarded as a bundle of magnets which are equivalent to the circuit. The same consideration proves that without in any way affecting the resulting forces, the infinitesimal currents which encircle the particles of a bar magnet can always be replaced by finite currents, these currents forming closed circuits about the axis of the bar when those of the particles are distributed symmetrically about this axis. For this it is sufficient to imagine surfaces within the bar terminating at the surface of the magnet and cutting the lines of magnetization everywhere at right angles and passing through the magnetic elements which can always be assumed to be placed at the points where these lines are met by the surfaces. Thus, if all the elements of a particular surface are of equal intensity on equal areas, they can be replaced by a single current flowing along the curve formed by the intersection of this surface and that of the magnet. If they should vary, increasing in intensity from the surface to the axis of the magnet, they should first be replaced by a current at this intersection such that it ought to be according to the *minimum* intensity of the particular currents of the surface normal to the lines of magnetization under consideration, and then, for each line circumscribing the portions of this surface where the small currents become more intense, a new current should be imagined which is concentric to the previous one as required by the difference in intensity of the adjacent currents, some outside and the others inside this line. If the intensity of the particular currents decreases from the surface to the axis of the bar, a corresponding concentric current should be imagined on the separation line in the opposite sense. Finally; an increase of intensity which might follow the decrease would require a new concentric current directed as in the first case.

I only add here these comments so as not to omit a remarkable consequence of the results of this Treatise, and not in order to deduce some probabilities in favor of the supposition that the electric electric currents of magnets form closed circuits about their axes. Having at first hesitated between this supposition and the other way of conceiving currents as encircling the particles of magnets; I have recognized for a long time that this latter concept best fit all the facts, and in this respect my opinion has not changed at all.

Moreover, this conclusion is useful in that it renders the similarity of the actions produced by an electrodynamic helix, on the one hand, or by a magnet, on the other, as completely from the point of view of theory as when found by experiments, and by which the explanations where one substitutes, as I have done in those that I have given above on the revolving movement of a floating magnet, a single closed circuit.

the surface or in the interior of non conducting bodies, and at rest at points of these bodies where they are located, whether in equilibrium in the first case, or whether due to the fact that they are held fixed in the second case by the coercive force of the non-conductive bodies, will produce, by their attractions and repulsions reciprocally proportional to the square of the distances, all the phenomena of ordinary electricity.

3° When the same molecules move in conducting wires, they meet in neutral fluid and separate at every moment, there results from their mutual action forces that depend first on the length of extremely short periods between two consecutive meetings or separations, next directions following which occur alternative compositions and decompositions of neutral fluid. The forces thus produced are constant as soon as this dynamic state of the fluids in the electrical conductors becomes permanent; it is these that produce all the phenomena of attraction and repulsion that I have discovered between two such wires.

4° The action, whose existence I found, between the earth and voltaic conductors, makes it difficult to doubt that the currents are similar to those of conducting wires in the interior of our earth. Presumably these currents are the cause of the internal heat, they occur mainly where the oxidized layer that forms a complete cover rests on a metalic core, in accordance with the explanation that Sir H. Davy gave of volcanoes, and it is they that magnetize magnetic minerals and bodies exposed under the right circumstances by electrodynamic action of the earth. The identity of effects explained in the note earlier provide no irrefutable proof that the terrestrial currents are not solely established around the particles of the earth.

5° The same permanent electrodynamic state consisting of a series of decompositions and recompositions of neutral fluid which take place in conducting wires, exists around particles of magnetic bodies, and produces actions similar to those which occur in a wire.

6° In calculating these actions according to the formula that represents the two elements of voltaic currents, we find specifically, for the forces that result either when a magnet acts on a wire, or when two magnets interact with each other, the values that were produced from the latest of Mr. Biot's experiments in the first case, and those of Coulomb in the second.

7° This identity, purely mathematical, confirms the most comprehensive view, based also on the body of all the facts, that the properties of magnets are actually due to the continual movement of the two electric fluids around their particules.

8° When the action of a magnet, or of a conducting wire, creates a movement around the particles of a body, molecules of positive electricity and negative electricity, which must be formed in the electrodynamic permanent state which results from actions which it exerts, whether on a wire or on a magnetized body, reach this state after a time always very short, but which is never zero, and the duration of which depends in general on the resistance that opposes the movement of the body fluids which it contains. During this movement, before reaching a state of constant motion, or when this state is stationary, they must exert forces that most probably produce the singular effects that Mr. Arago has discovered. This explanation is, moreover, that of Mr. Poisson, applied to my theory, based on the assumption of an electric current forming a very small closed circuit acting as precisely two molecules, one of austral fluid, another boreal fluid located on its axis, the other in the plane of the small current, at distances of these planes which are equal to each other, and all larger when the electric current has more intensity, we must necessarily find the same values for the forces that develop, or when it is assumed that the current which is established gradually

ceases to exist whether when one imagines that the magnetic molecules, first come together in neutral fluid, or are separate, or successively move away to greater distances and then approach to meet again.

In finishing this Treatise I think that I should observe that I have not had time to build the instruments shown in Figure 4 of the first Plate (Pl. 1 pg. 113, fig. 4 pg. 118) and Figure 20 (Pl. 2 pg. 114, fig. 20 pg. 124) of the second Plate. The experiments for which they are intended have not yet been done, but since these experiments are only intended to verify results obtained by other means, and they are mainly useful as proof against those that provided these results, I have not thought it necessary to remove the descriptions.

NOTES[1]

CONTAINING

SOME NEW DEVELOPMENTS ON THE SUBJECTS TREATED IN THE PRECEDING TREATISE

I. *On the method of demonstrating, using the four equilibrium cases explained at the beginning of this Treatise (page 6), that the value of the mutual action of two conducting wires is*

$$-\frac{2ii'}{\sqrt{r}}\cdot\frac{\mathrm{d}^2\sqrt{r}}{\mathrm{d}s\mathrm{d}s'}\mathrm{d}s\mathrm{d}s'.$$

Following the order of the transformations that I successively applied to this expression, one finds first, due to the first two equilibrium cases, that the expression is

$$\frac{ii'(\sin\theta\sin\theta'\cos\omega+k\cos\theta\cos\theta')\mathrm{d}s\mathrm{d}s'}{r^n};$$

one deduces from the third, between n and k, the relation $n+2k=1$, and from the fourth $n=2$, from which $k=-\frac{1}{2}$; this fourth equilibrium case is therefore the one employed in the last place for the determination of the value of the force which develops between two elements of conducting wires : but one can follow a different path using a consideration provided by Mr. de Laplace, as he concluded from Mr. Biot's first experiments, on the mutual action between a magnet and an indefinite rectilinear conductor, which showed that the force exerted by an element of the wire on one of the poles of the magnet varies inversely with the square of the distance, if the distance only changes in value and the angle between the measured straight line and the direction of the element stays the same. In applying this consideration to the mutual action of two elements of conducting wires, it is easy to see, independent of any preliminary research on the value of the resulting force that this force is also inversely proportional to the distance when only it is varied, and the angles that determine the relationship between the elements are unchanged. In effect, based on the considerations developed at the beginning of this Treatise, the force in question here is necessarily directed along the line r, and has the value

$$ii'f(r,\theta,\theta',\omega)\mathrm{d}s\mathrm{d}s';$$

[1] These are the NOTES from the 2nd editions, 1827–1883. They are substantially changed from the NOTES in the 1st edition, but are the same as the NOTES published in the *Mémoires de L'Académie Royale des Sciences de L'Institut de France*, Année 1823, Tome VI, 1827.

from which it follows, defining α, β, γ to be the angles that this straight line forms with the three axes, the three results are expressed by

$$ii' f(r,\theta,\theta',\omega)\cos\alpha\,\mathrm{d}s\mathrm{d}s',\quad ii' f(r,\theta,\theta',\omega)\cos\beta\,\mathrm{d}s\mathrm{d}s',\quad ii' f(r,\theta,\theta',\omega)\cos\gamma\,\mathrm{d}s\mathrm{d}s',$$

and the three forces parallel to the three axes which result between two circuits by the double integrals of these expressions, i and i' being constants.

Now it follows from the fourth equilibrium case, by replacing the three rings by any similar curves such that the dimensions are homologous in continuous geometric progression, that these three forces have equal values in the two similar systems; it is thus necessary that the integrals which express them have null dimension relative to all the lines which enter, following the remark by Mr. de Laplace which I just remember, and therefore by consequence also the differentials of which they are composed, considering $\mathrm{d}s$ and $\mathrm{d}s'$ among the lines which are included, because the number of these differentials, though infinite of second order, should be considered as the same in the two systems.

Now the product $\mathrm{d}s\mathrm{d}s'$ is two dimensional : it then must be that $f(r,\theta,\theta',\omega)\cos\alpha$, $f(r,\theta,\theta',\omega)\cos\beta$, $f(r,\theta,\theta',\omega)\cos\gamma$, are of dimension — 2 ; and since the angles θ, θ', ω, α, β, γ are expressed by numbers which contribute nothing in the dimensions of the values of the differentials, and since $f(r,\theta,\theta',\omega)$ only contains the single line r, it is necessary that this function is proportional to $\frac{1}{r^2}$, so that the force exerted from one to the other of the two elements of the conducting wires is given by

$$\frac{ii'\varphi(\theta,\theta',\omega)}{r^2}\mathrm{d}s\mathrm{d}s'.$$

The first two equilibrium cases then determine the function φ, where only k remains unknown, and it has

$$\frac{ii'(\sin\theta\sin\theta'\cos\omega + k\cos\theta\cos\theta')}{r^2}\mathrm{d}s\mathrm{d}s',$$

for the value of the sought force : it is, as is known, in this form that I presented it in the Mémoire that I read before the Académie on 4 December 1820. By replacing $\sin\theta\sin\theta'\cos\omega$, and $\cos\theta\cos\theta'$ by their values

$$-\frac{r\mathrm{d}^2 r}{\mathrm{d}s\mathrm{d}s'},\quad -\frac{\mathrm{d}r}{\mathrm{d}s}\cdot\frac{\mathrm{d}r}{\mathrm{d}s'},$$

it becomes

$$\begin{aligned}
&-\frac{ii'}{r^2}\left(\frac{r\mathrm{d}^2 r}{\mathrm{d}s\mathrm{d}s'} + k\frac{\mathrm{d}r}{\mathrm{d}s}\cdot\frac{\mathrm{d}r}{\mathrm{d}s'}\right)\mathrm{d}s\mathrm{d}s' = \\
&-\frac{ii'(r\mathrm{d}\mathrm{d}'r + k\mathrm{d}r\mathrm{d}'r)}{r^2} = -\frac{ii' r^k \mathrm{d}\mathrm{d}'r + k r^{k-1}\mathrm{d}r\,\mathrm{d}'r}{r^{k+1}} = \\
&-\frac{ii'\mathrm{d}(r^k\mathrm{d}'r)}{r^{k+1}} = -\frac{ii'\mathrm{d}\mathrm{d}'(r^{k+1})}{(k+1)r^{k+1}},
\end{aligned}$$

and shortening by substituting $k+1 = m$, one has this simple expression for the looked for force

$$-\frac{ii'\,\mathrm{d}\mathrm{d}'(r^m)}{mr^m}.$$

It only remains to determine m in the equilibrium case which shows that the sum of the components of the forces acting on an element of a conducting wire, taken in the direction

of the element, are always null when the conducting wire forms a closed circuit. This equilibrium case, which I considered in this Treatise as the third, should be like the fourth, since it is the last which one uses in the full determination of the sought after force. In replacing $\mathrm{d}'r$ par — $\cos\theta'\mathrm{d}s'$ in the value

$$-\frac{ii'\mathrm{d}(r^{m-1}\mathrm{d}'r)}{r^m}$$

of the force that the two elements exert one on the other, one has, for its component, in the direction of the element $\mathrm{d}s'$,

$$\frac{ii'\mathrm{d}s'\cos\theta'\mathrm{d}(r^{m-1}\cos\theta')}{r^m}=\frac{1}{2}\cdot\frac{ii'\mathrm{d}s'\mathrm{d}(r^{2m-2}\cos^2\theta')}{r^{2m-1}},$$

in which it is necessary that the integral relative to the differentials which depend on $\mathrm{d}s$ be null at all times that the curve s is closed; but it is easy to see, by integration by parts, that it is equal to

$$\frac{1}{2}ii'\mathrm{d}s'\left[\frac{\cos^2\theta'_2}{r_2}-\frac{\cos^2\theta'_1}{r_1}+(2m-1)\int\frac{\cos^2\theta'\mathrm{d}r}{r^2}\right].$$

The first part of this expression vanishes when the curve s is closed, because $r_2=r_1$, $\cos\theta'_2=\cos\theta'_1$, with regard to the second one shows easily, as we have done, page 16, that $\int\frac{\cos^2\theta'\mathrm{d}r}{r^2}$ cannot vanish, whatever the form of the closed curve s; it is therefore necessary that has $2m-1=0$, $m=\frac{1}{2}$, and that the value of the force due to the mutual action of the two elements $\mathrm{d}s$, $\mathrm{d}s'$ is

$$-\frac{ii'\mathrm{d}\mathrm{d}'(r^m)}{mr^m}=-\frac{2ii'\mathrm{d}\mathrm{d}'\sqrt{r}}{\sqrt{r}}.$$

II. *On a proper transformation which simplifies the calculation of the mutual action of two rectilinear conductors.*

When the two conductors are rectilinear, the angle formed by the directions of the two elements is constant and equal to the same directions of the two conductors; it is supposed to be known, and one has, as designated by *, on page 15,

$$r\frac{\mathrm{d}^2r}{\mathrm{d}s\mathrm{d}s'}+\frac{\mathrm{d}r}{\mathrm{d}s}\cdot\frac{\mathrm{d}r}{\mathrm{d}s'}=-\frac{\mathrm{d}x}{\mathrm{d}s}\cdot\frac{\mathrm{d}x'}{\mathrm{d}s'}-\frac{\mathrm{d}y}{\mathrm{d}s}\cdot\frac{\mathrm{d}y'}{\mathrm{d}s'}-\frac{\mathrm{d}z}{\mathrm{d}s}\cdot\frac{\mathrm{d}z'}{\mathrm{d}s'}=-\cos\epsilon,$$

from which it follows that

$$\frac{\mathrm{d}\mathrm{d}'(r^m)}{mr^m}=\frac{(m-1)\mathrm{d}r\mathrm{d}r'+r\mathrm{d}\mathrm{d}'r}{r^2}=\frac{(m-2)\mathrm{d}r\mathrm{d}r'-\cos\epsilon\mathrm{d}s\mathrm{d}s'}{r^2}.$$

By designating by p some other exponent, one has equivalently

$$\frac{\mathrm{d}\mathrm{d}'(r^p)}{pr^p}=\frac{(p-2)\mathrm{d}r\mathrm{d}'r-\cos\epsilon\mathrm{d}s\mathrm{d}s'}{r^2},$$

and, by eliminating $\frac{\mathrm{d}r\mathrm{d}'r}{r^2}$ between the two equations, one obtains

$$\frac{(p-2)\mathrm{d}\mathrm{d}'(r^m)}{mr^m}-\frac{(m-2)\mathrm{d}\mathrm{d}'(r^p)}{pr^p}=\frac{(m-p)\cos\epsilon\mathrm{d}s\mathrm{d}s'}{r^2},$$

from which

$$\frac{\mathrm{dd}'(r^m)}{mr^m} = \frac{m-2}{p-2} \cdot \frac{\mathrm{dd}'(r^p)}{pr^p} + \frac{m-p}{p-2} \cdot \frac{\cos\epsilon \mathrm{d}s\mathrm{d}s'}{r^2},$$

By substituting $\frac{1}{2}$ for m in this equation, and multiplying its two parts which result by $-ii'$, one has the value of the action of two elements of conducting wires transformed as

$$-\frac{ii'\mathrm{dd}'\sqrt{r}}{\sqrt{r}} = \frac{\frac{3}{2}ii'}{p-2} \cdot \frac{\mathrm{dd}'(r^p)}{pr^p} - \frac{(\frac{1}{2}-p)ii'}{p-2} \cdot \frac{\cos\epsilon \mathrm{d}s\mathrm{d}s'}{r^2},$$

and one can in this expression assign any value to p. The one that provides the most convenience for calculation is $p = -1$, by adopting this it becomes

$$-\frac{ii'\mathrm{dd}'\sqrt{r}}{\sqrt{r}} = \frac{1}{2}ii'\mathrm{dd}'\frac{1}{r} + \frac{1}{2} \cdot \frac{ii'cos\epsilon \mathrm{d}s\mathrm{d}s'}{r^2} = \frac{1}{2}ii'\mathrm{d}s\mathrm{d}s'\left(\frac{cos\epsilon}{r^2} + r\frac{\mathrm{d}^2\frac{1}{r}}{\mathrm{d}s\mathrm{d}s'}\right).$$

I have already found by another means, page 29, this expression of the force which is exerted on one and the other of two elements of conducting wires; one can only use it, for simplification of calculations, when the conductors are rectilinear, because it is only then that the angle ϵ is constant and known; but in this case, it is this that gives in the simplest manner the values of the forces and the rotational moments which result from the mutual action of two conductors of this type. If I have in this Treatise used other means to calculate these values, it is because at the time that I wrote I did not yet know this transformation of my formula.

III. *On the direction of the straight line designated in this treatise given the name of* electrodynamic action directrix at a given point, *when this action is that of a closed and planar circuit in which all of the dimensions are very small.*

The law which I have named *electrodynamic action directrix at a given point*(1) is that which forms with the three axes the angles whose cosines are proportional respectively to the three quantities A, B, C; the values of these three quantities, found on page 26, become

$$\mathtt{A} = \lambda\left(\frac{\cos\xi}{r^3} - \frac{3qx}{r^5}\right),$$
$$\mathtt{B} = \lambda\left(\frac{\cos\eta}{r^3} - \frac{3qy}{r^5}\right),$$
$$\mathtt{C} = \lambda\left(\frac{\cos\zeta}{r^3} - \frac{3qz}{r^5}\right),$$

when one substitutes the number 2 for n; and one assumes the small circuit of arbitrary form located as in (Pl. 1 pg. 113, fig. 14 pg. 122), so that after having placed the origin A of the coordinates at the given point, one takes as the z axis the perpendicular AZ lowered from the point A on the plane of the small circuit, and for the plane of the xz that which passes by this perpendicular and by the center of inertia O of the area LMS which relate the x, y, z

(1) Note by MDG: i.e. *magnetic induction.*

which enter into the values of A,B,C, it is evident that one has $y = 0$, $q = z$, $\xi = \eta = \frac{\pi}{2}, \zeta = 0$ and that these values reduce as a consequence to

$$\mathtt{A} = -\frac{3\lambda xz}{r^5}, \quad \mathtt{B} = 0, \quad \mathtt{C} = \lambda\left(\frac{1}{r^3} - \frac{3z^2}{r^5}\right) = \frac{\lambda(x^2 - 2z^2)}{r^5},$$

because $r^2 = x^2 + z^2$. Since B is null, the directrix AE is necessarily in the plane of the xz determined as we have just said; it forms with the axes of the x an angle EAX whose tangent is equal to $\frac{\mathrm{C}}{\mathrm{A}}$, one finds, for the value of the tangent of OAE,

$$\tan \mathtt{OAE} = \frac{\frac{z}{x} - \frac{2z^2 - x^2}{3xz}}{1 + \frac{2z^2 - x^2}{3x^2}} = \frac{(z^2 + x^2)x}{(2x^2 + 2z^2)z} = \frac{1}{2} \cdot \frac{x}{z} = \frac{1}{2} \tan \mathtt{COA},$$

from which it follows if one takes $\mathtt{OB} = \frac{1}{3}\mathtt{A}$, and one elevates OA to the point B a perpendicular plane at AO which intercepts in D the normal OC on the plane of the small circuit, the straight line ADE determined by the points A,D, will be the directrix of the action exerted at the point A by the electric current flowing in it, which gives

$$\mathtt{AB} = 2\mathtt{OB}, \quad \tan \mathtt{BDA} = 2 \tan \mathtt{BDO},$$

and

$$\tan \mathtt{OAE} = \cot \mathtt{BDA} = \frac{1}{2} \cot \mathtt{BDO} = \frac{1}{2} \tan \mathtt{COA}.$$

This construction gives in the simplest manner the situation of the directrix AE such as we have seen, page 55, that the pole of a magnet placed in A is moved by the action of this current. It is to be remarked that it is situated at the edge of the plane LMS of the small circuit which was described, the same as the direction of the needle of inclination which in general points to the magnetic equator; because the point O is considered as the center of the earth, the planes LMS,OAC like those of the equator and of the magnetic meridian, and the straight line AE like the direction of the needle of inclination, it is evident that the angle OAE between the terrestrial ray OAE and the direction AE of the magnet's needle is the complement of the inclination, and that the angle COA is the complement of the magnetic latitude LOA; therefore the preceding equation becomes:

$$\cot \text{incl.} = \frac{1}{2} \cot \text{lat},$$

or

$$\tan \text{incl.} = 2 \tan \text{lat}.$$

IV. *On the value of the force exerted by an indefinite angular conductor on the pole of a small magnet, and on that which impresses on the pole a conductor in the form of a parallelogram situated in the same plane.*

Whether one considers the pole B (Pl. 2 pg. 114, fig. 34 pg. 129) of the small magnet AB as the extremity of an electrodynamic solenoid or as a magnetic molecule, one can agree, in both views, with respect to the expression of the force exerted on the pole by each element of the angular conductor CMZ : one finds in general that in lowering the point B, on one of its branches $C\mu M$ extended toward O, the perpendicular $BO = b$, setting $O\mu = s$, $BM = a$, $B\mu = r$, the angle $B\mu M = \theta$, the angle $CMH = BMO = \epsilon$ and designating by ρ a constant coefficient, the force which is exerted on the pole B of the element $\mathrm{d}s$ situated at μ is equal to

$$\frac{\rho \sin\theta \, \mathrm{d}s}{r^2},$$

where the integration is from $s = OM = a\cos\epsilon$ to $s = \infty$, or, what amounts to the same thing, from $\theta = \epsilon$ to $\theta = 0$: but, in the triangle $BO\mu$, whose side $OB = b = a\sin\epsilon$, one has

$$r = \frac{a\sin\epsilon}{\sin\theta}, \quad s = a\sin\epsilon\cot\theta, \quad \mathrm{d}s = -\frac{a\sin\epsilon \mathrm{d}\theta}{\sin^2\theta}, \quad \frac{\mathrm{d}s}{r^2} = -\frac{\mathrm{d}\theta}{a\sin\epsilon},$$

thus

$$\frac{\rho\sin\theta \mathrm{d}s}{r^2} = -\frac{\rho\sin\theta \mathrm{d}\theta}{a\sin\epsilon},$$

whose integral is

$$\frac{\rho}{a\sin\epsilon}(\cos\theta + C),$$

where, taking between the limits determined above,

$$\frac{\rho(1-\cos\epsilon)}{a\sin\epsilon} = \frac{\rho}{a}\tan\frac{1}{2}\epsilon,$$

value which is doubled to obtain the force exerted on the pole B by the indefinite angular conductor CMZ; this force, for the inverse reason that $BM = a$, is therefore, for the same value of a, proportional to the tangent of half the angle CMH, and not this angle itself, since one has assumed that the value

$$\frac{\rho\sin\theta \mathrm{d}s}{r^2}$$

of the force exerted by the element $\mathrm{d}s$ on the pole B, is to be found from *analysis by calculation* the supposition that the force produced by the conducting wire CMZ is proportional to the angle CMH. One cannot doubt that there has been an error in this calculation; but it would be even more interesting to learn what is the purpose of determining the value of a differential from that of the definite integral which results between the given limits, that which no mathematician it appears to me, up to now, has believed possible.

Since one cannot, in practice, make the branches MC,MZ of the angular conductor actually infinite, nor elongate the ends of the wire since it is formed to connect its branches in communication with the extremities of the battery, at a sufficiently great distance from the small magnet AB so that they will effect absolutely no action on it, one should, rigorously, regard the value that we will obtain as an approximation. Finally in order to experimentally

verify an exact result, it is necessary to calculate the force exerted on the pole B of the small magnet by a conducting wire PSRMTSN, whose portions SP, SN, which communicate at the two extremities of the battery, are covered in silk and twisted together, as one sees in SL, up to close to the battery, seeing that the actions that they produce cancel each other, and since the rest form a lozenge SRMT situated in such a way that the direction of the diagonal SM of this lozenge passes by the point B. But first, by preserving the preceding names and adding the angle name $\mathtt{BSO}' = -\epsilon$, the angle $\mathtt{BRO}' = \theta_1'$, the distance $\mathtt{BS} = a'$ and the perpendicular $\mathtt{BO}' = b' = -a' \sin \epsilon$ because the angle $\mathtt{BSO}' = -\epsilon$, one easily sees that the action of the portion RS of the wire conductor on the pole B is equal to

$$-\frac{\rho(\cos \epsilon - \cos \theta_1')}{b'},$$

so that, since $b = a \sin \epsilon$, one finds

$$\frac{\rho(\cos \theta_1 - \cos \epsilon)}{b},$$

for that which affects the portion MR on the same pole B, by taking the preceding integral from $\theta = 0$ to $\theta = \theta_1$.

By combining these two expressions, and doubling the sun, one gets the total action of the lozenge contour MRST,

$$2\rho\left(\frac{\cos \theta_1}{b} - \frac{\cos \epsilon}{b} + \frac{\cos \theta_1'}{b'} - \frac{\cos \epsilon}{b'}\right).$$

This value is susceptible to another form which one obtains by relating the positions of the four angles of the lozenge to two axes BX, BY determined by the point B parallel to its sides and which joins them at the points D, E, F, G; if one sets $\mathtt{BD} = \mathtt{BF} = g$, $\mathtt{BE} = \mathtt{BG} = h$, one has

$$b = \mathtt{BO} = g \sin 2\epsilon, \quad b' = \mathtt{BO}' = h \sin 2\epsilon,$$

$$\cos \theta_1 = \frac{\mathtt{OR}}{\mathtt{BR}} = \frac{h + g \cos 2\epsilon}{\sqrt{g^2 + h^2 + 2gh \cos 2\epsilon}},$$

$$\cos \theta_1' = \frac{\mathtt{O'R}}{\mathtt{BR}} = \frac{g + h \cos 2\epsilon}{\sqrt{g^2 + h^2 + 2gh \cos 2\epsilon}},$$

and from the average of these values, those of the force exerted on the pole B become

$$2\rho\left(\frac{h + g \cos 2\epsilon}{g \sin 2\epsilon \sqrt{g^2 + h^2 + 2gh \cos 2\epsilon}} + \frac{g + h \cos 2\epsilon}{h \sin 2\epsilon \sqrt{g^2 + h^2 + 2gh \cos 2\epsilon}} - \frac{\cos \epsilon}{g \sin 2\epsilon} - \frac{\cos \epsilon}{h \sin 2\epsilon}\right) =$$
$$\rho\left(\frac{2\sqrt{g^2 + h^2 + 2gh \cos 2\epsilon}}{gh \sin 2\epsilon} - \frac{1}{g \sin \epsilon} - \frac{1}{h \sin \epsilon}\right),$$

by replacing in the two last terms $\sin 2\epsilon$ by its value $2 \sin \epsilon \cos \epsilon$.

Now drop from the point D, perpendiculars DI, DK to the straight lines BM, BR : the first is obviously equal to $g \sin \epsilon$, and the second is obtained by noticing that in multiplying it

by BR $= \sqrt{g^2 + h^2 + 2gh\cos 2\epsilon}$, one has a product equal to twice the surface of the triangle BDR, that is, $gh\sin 2\epsilon$, at the end by naming $p_{1,1}$ and $p_{1,2}$ their perpendiculars, it becomes

$$\frac{1}{p_{1,1}} = \frac{1}{g\sin\epsilon}, \quad \frac{1}{p_{1,2}} = \frac{\sqrt{g^2 + h^2 + 2gh\cos 2\epsilon}}{gh\sin 2\epsilon};$$

by dropping from the point E the two perpendiculars EU,EV on the straight lines BT,BS, and representing them by $p_{2,1}$ and $p_{2,2}$, the first becomes equal to DK due to the equality of the triangles BDR,BET, and the second will have the value $h\sin\epsilon$, from the fact that the expression of the force exerted by the contour of the lozenge MRST on the pole B can be written as :

$$\rho\left(\frac{1}{p_{1,2}} + \frac{1}{p_{2,1}} - \frac{1}{p_{1,1}} - \frac{1}{p_{2,2}}\right).$$

In this form it applies not only to a lozenge one of whose diagonals is directed so as to pass by the point B, but to an arbitrary parallelogram NRST (Pl. 2 pg. 114, fig. 44 pg. 132) whose perimeter carries an electric current which acts on the pole of a magnet located in the plane of this parallelogram. It results, in effect, as was already said, pages 27 and 55, that the effect of NRST on the pole B is the same as if all the elements $\mathrm{d}^2\lambda$ which compose its surface acting on this pole with a force equal to $\frac{\rho\mathrm{d}^2\lambda}{r^2}$; from which it follows, labeling by x and y the coordinates referring to the axes BX, BY, and at the origin B of an arbitrary point M of the area of the parallelogram which gives

$$\mathrm{d}^2\lambda = \mathrm{d}x\,\mathrm{d}y\sin 2\epsilon, \quad \text{and} \quad r = \sqrt{x^2 + y^2 + 2xy\cos 2\epsilon},$$

the total force, impinging on pole B of the small magnet AB, will then be

$$\rho\sin 2\epsilon \int\int \frac{\mathrm{d}x\,\mathrm{d}y}{(x^2 + y^2 + 2xy\cos 2\epsilon)^{\frac{3}{2}}}.$$

Now we have seen, page 50, that the indefinite integral

$$\frac{\mathrm{d}s\,\mathrm{d}s'}{(a^2 + s^2 + s'^2 - 2ss'\cos\epsilon)^{\frac{3}{2}}}$$

is

$$\frac{1}{a\sin\epsilon}\arctan\frac{ss'\sin^2\epsilon + a^2\cos\epsilon}{a\sin\epsilon\sqrt{a^2 + s^2 + s'^2 - 2ss'\cos\epsilon}},$$

or

$$-\frac{1}{a\sin\epsilon}\arctan\frac{a\sin\epsilon\sqrt{a^2 + s^2 + s'^2 - 2ss'\cos\epsilon}}{ss'\sin^2\epsilon + a^2\cos\epsilon},$$

by removing the constant $\frac{\pi}{2}$. When $a = 0$, this quantity takes the form $\frac{0}{0}$; but since the arc should be replaced by its tangent, the factor null $a\sin\epsilon$ vanishes, and one has

$$\int\int \frac{\mathrm{d}s\,\mathrm{d}s'}{(s^2 + s'^2 - 2ss'\cos\epsilon)^{\frac{3}{2}}} = -\frac{\sqrt{s^2 + s'^2 - 2ss'\cos\epsilon}}{ss'\sin^2\epsilon},$$

which is easy to verify by differentiation. One concludes immediately that the expression of the force that we have calculated, considered as an indefinite integral, is

$$-\frac{\rho\sqrt{x^2+y^2+2xy\cos 2\epsilon}}{xy\sin 2\epsilon}=-\frac{\rho}{p},$$

Defining p to be the perpendicular PQ dropped to the point P on BM, because the double of the area of the triangle BPM is both equal to $p\sqrt{x^2+y^2+2xy\cos 2\epsilon}$ and to $xy\sin 2\epsilon$, which gives

$$\frac{1}{p}=\frac{\sqrt{x^2+y^2+2xy\cos 2\epsilon}}{xy\sin 2\epsilon}.$$

It only remains now to calculate the values taken by this indefinite integral at the four vertices N,R,T,S of the parallelogram, and assign them convenient signs; continuing to designate respectively by $p_{1,1}, p_{1,2}, p_{2,1}, p_{2,2}$ the perpendiculars DI,DK,EU,EV, it is evident that one thus obtains for the value of the force looked for

$$\rho\left(\frac{1}{p_{1,2}}+\frac{1}{p_{2,1}}-\frac{1}{p_{1,1}}-\frac{1}{p_{2,2}}\right).$$

The direction perpendicular to the plane of the parallelogram NRST after which the pole of a magnet located in B is carried by the action of the electric current which follows the contour of this parallelogram, is the electrodynamic action directrix which acts at the point B : where from which it follows that if there is at this point an electric current element in the plane of the parallelogram, it will form a right angle with the action directrix, and thus the action of this current on the element will be a force located in this plane, perpendicular to the direction of the element, and equal to that the same current would exert on the pole of a magnet placed at the point B multiplied by a given constant, which is here that of ρ at $\frac{1}{2}ii'\mathrm{d}s$, naming this element $\mathrm{d}s$; so that the force thus directed which acts on the element will have the value

$$\frac{1}{2}ii'\mathrm{d}s'\left(\frac{1}{p_{1,2}}+\frac{1}{p_{2,1}}-\frac{1}{p_{1,1}}-\frac{1}{p_{2,2}}\right)\cos\omega.$$

When the element located in B is in the plane of the parallelogram, but forms with this plane an angle equal to ω, one can replace it by two elements of the same intensity, one in this plane, the other which is perpendicular to it : the action of the current of the parallelogram on this last will be null, one should only take account of the one which acts on the first ; it is necssarily in the plane of the parallelogram, perpendicular to the element and equal to

$$\frac{1}{2}ii'\mathrm{d}s'\left(\frac{1}{p_{1,2}}+\frac{1}{p_{2,1}}-\frac{1}{p_{1,1}}-\frac{1}{p_{2,2}}\right).$$

END

PARIS — IMPRIMERIE C. MARPON ET E. FLAMMARON, RUE RACINE

Figure Index

Plate 1, 112, 113
Figure 01, 6, 115
Figure 02, 7, 116
Figure 03, 9, 117
Figure 04, 11, 102, 118
Figure 05, 12, 119
Figure 06, 13, 119
Figure 07, 16, 119
Figure 08, 17, 120
Figure 09, 18, 120
Figure 10, 21, 120
Figure 11, 21, 121
Figure 12, 22, 121
Figure 13, 22, 89, 121
Figure 14, 23, 106, 122
Figure 15, 25, 122
Figure 16, 27, 123
Plate 2, 112, 114
Figure 17, 29, 123
Figure 18, 28, 123
Figure 19, 30, 124
Figure 20, 31, 102, 124
Figure 21, 33, 34, 124
Figure 22, 39, 125
Figure 23, 36, 125
Figure 24, 37, 40, 125
Figure 25, 40, 126
Figure 26, 41, 126
Figure 27, 46, 126
Figure 28, 48, 127
Figure 29, 50, 52, 127
Figure 30, 53, 88, 127
Figure 31, 54, 88, 128
Figure 32, 55, 128
Figure 33, 56, 128
Figure 34, 108, 129
Figure 35, 62, 63, 129
Figure 36, 62, 63, 79, 129
Figure 37, 63, 130
Figure 38, 69, 71, 130
Figure 39, 79, 130
Figure 40, 85–87, 131
Figure 41, 86, 87, 131
Figure 42, 73, 131
Figure 43, 86, 132
Figure 44, 110, 132

Name Index

Ørsted, 2, 60, 66

Arago, 99–101

Biot, 2, 29, 58, 59, 62, 77–79, 81, 84, 90–95, 101, 103

Colladon, 99
Coulomb, 2, 6, 58, 62, 79, 91, 101

Davy, 94, 101
Descartes, 2

Erman, 61, 94

Faraday, 61, 65, 79, 83, 86

Gay-Lussac, 94
Gherardi, 81

Kepler, 2, 6

Laplace, 58, 103, 104

Newton, 1–3, 60, 80, 93

Poisson, 6, 98–101
Pouillet, 2

Savary, 22, 59, 94, 95

Velter, 94
Volta, 68

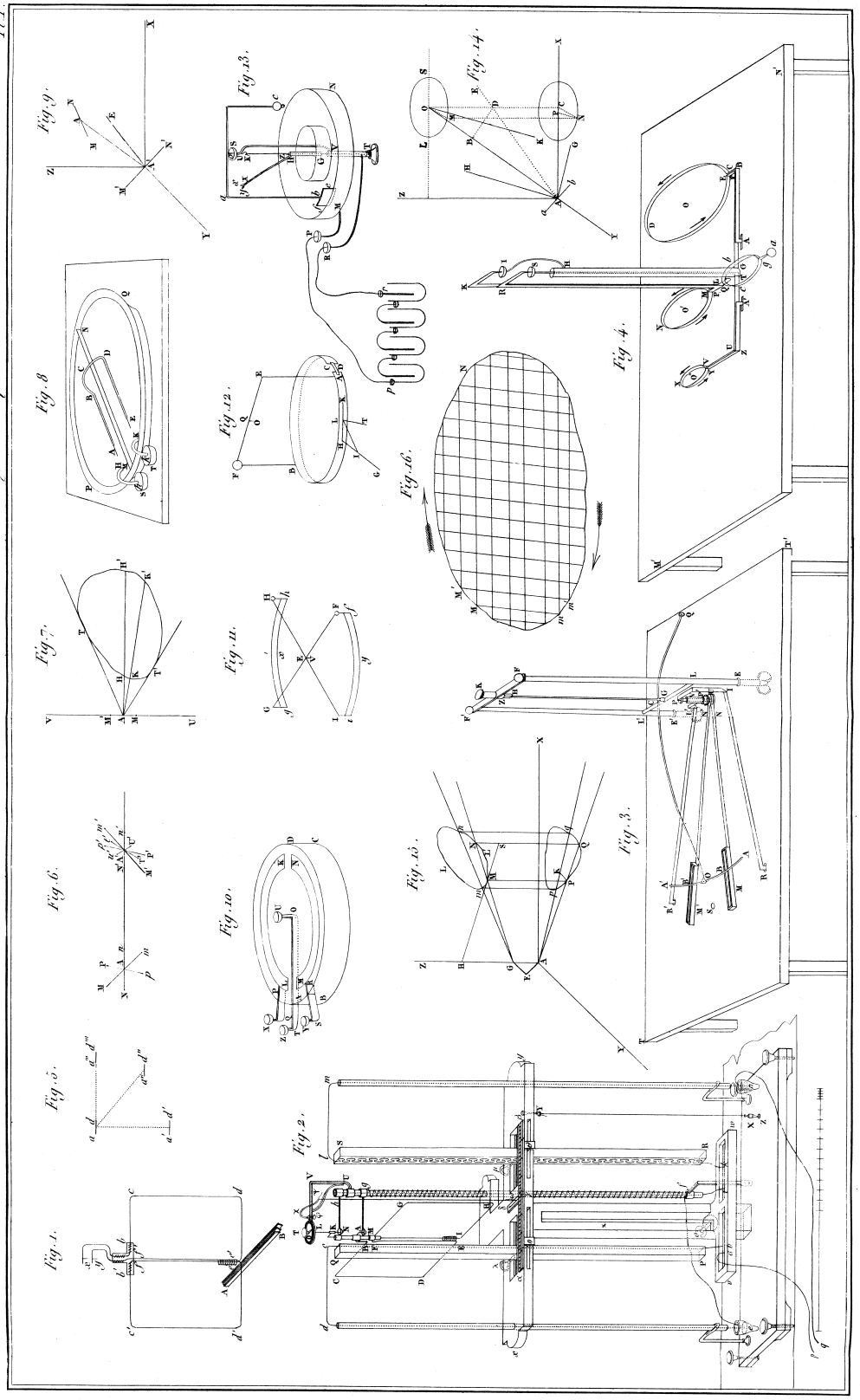
Théorie des Phénomènes Electro-dynamiques.
Pl. I.
Fig. 1.
Fig. 2.
Fig. 3.
Fig. 4.
Fig. 5.
Fig. 6.
Fig. 7.
Fig. 8
Fig. 9.
Fig. 10.
Fig. 11.
Fig. 12.
Fig. 13.
Fig. 14.
Fig. 15.
Fig. 16.

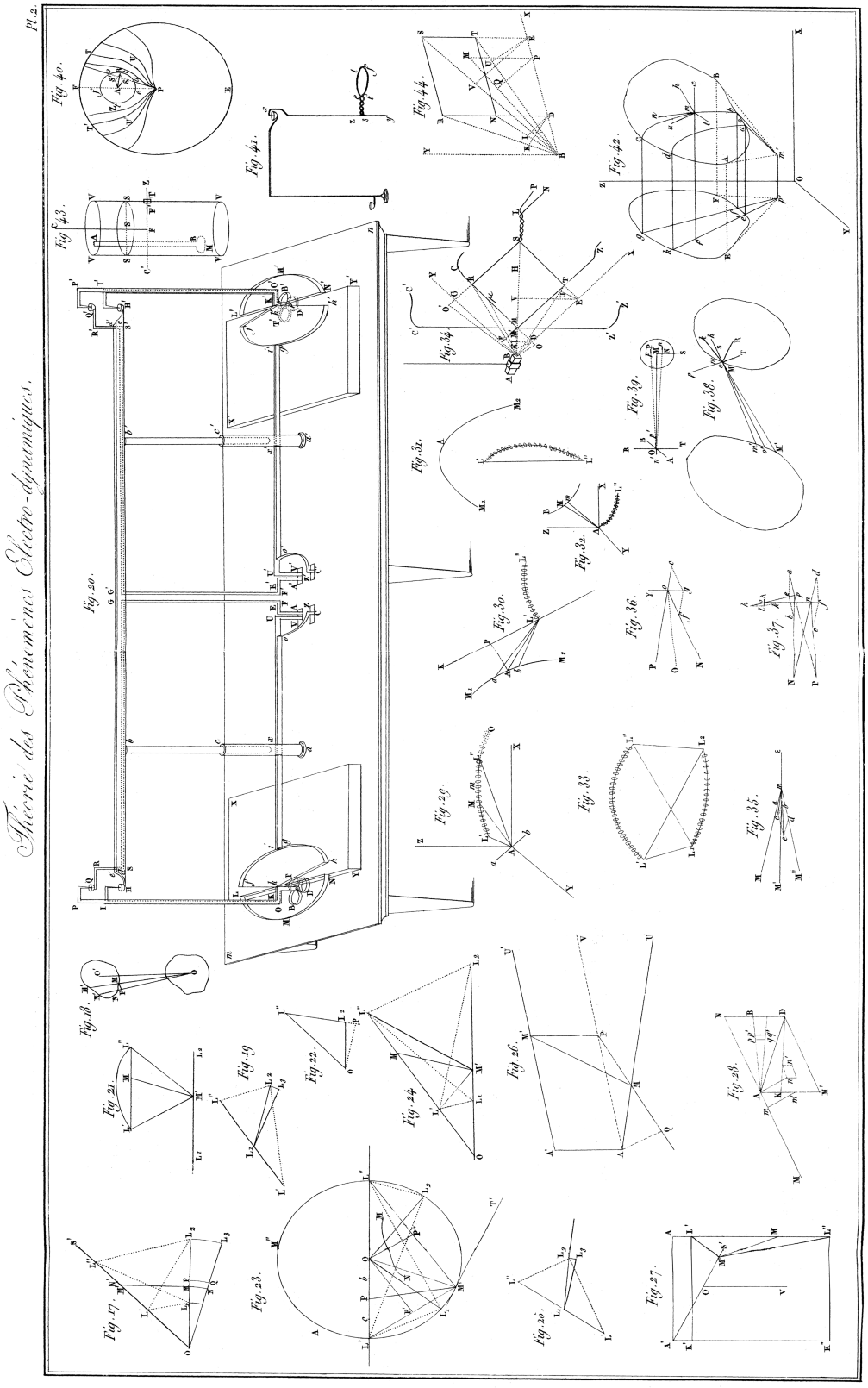
Pl. 2.
Théorie des Déplacements Électro-dynamiques.
Fig. 20.
Fig. 40.
Fig. 41.
Fig. 44.
Fig. 42.
Fig. 43.
Fig. 34.
Fig. 39.
Fig. 38.
Fig. 31.
Fig. 32.
Fig. 30.
Fig. 36.
Fig. 37.
Fig. 29.
Fig. 33.
Fig. 35.
Fig. 18.
Fig. 21.
Fig. 19.
Fig. 22.
Fig. 24.
Fig. 26.
Fig. 28.
Fig. 17.
Fig. 23.
Fig. 25.
Fig. 27.

Fig. 1.

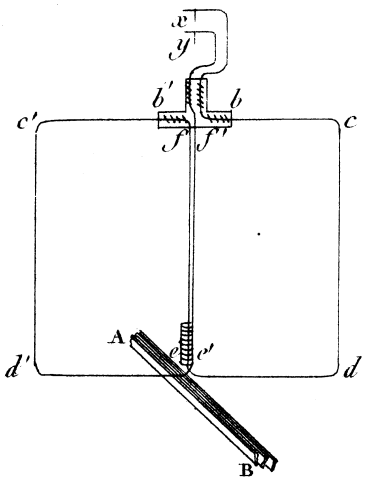

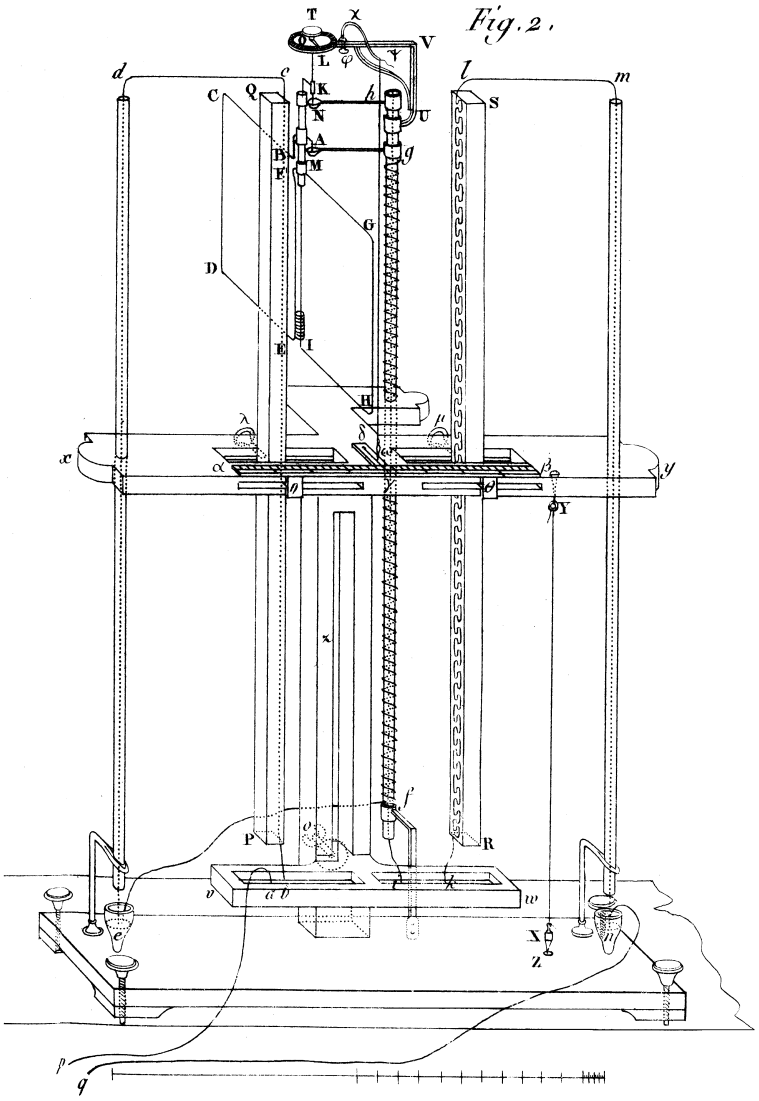
Fig. 2.
T
χ
V
L
φ
γ
d
c
l
m
C
Q
K
h
S
N
U
A
B
g
F
M
G
D
E
I
H
λ
μ
δ
x
α
β
y
o
θ
Y
z
f
P
o
R
v
a
b
w
X
Z
e
n
p
q

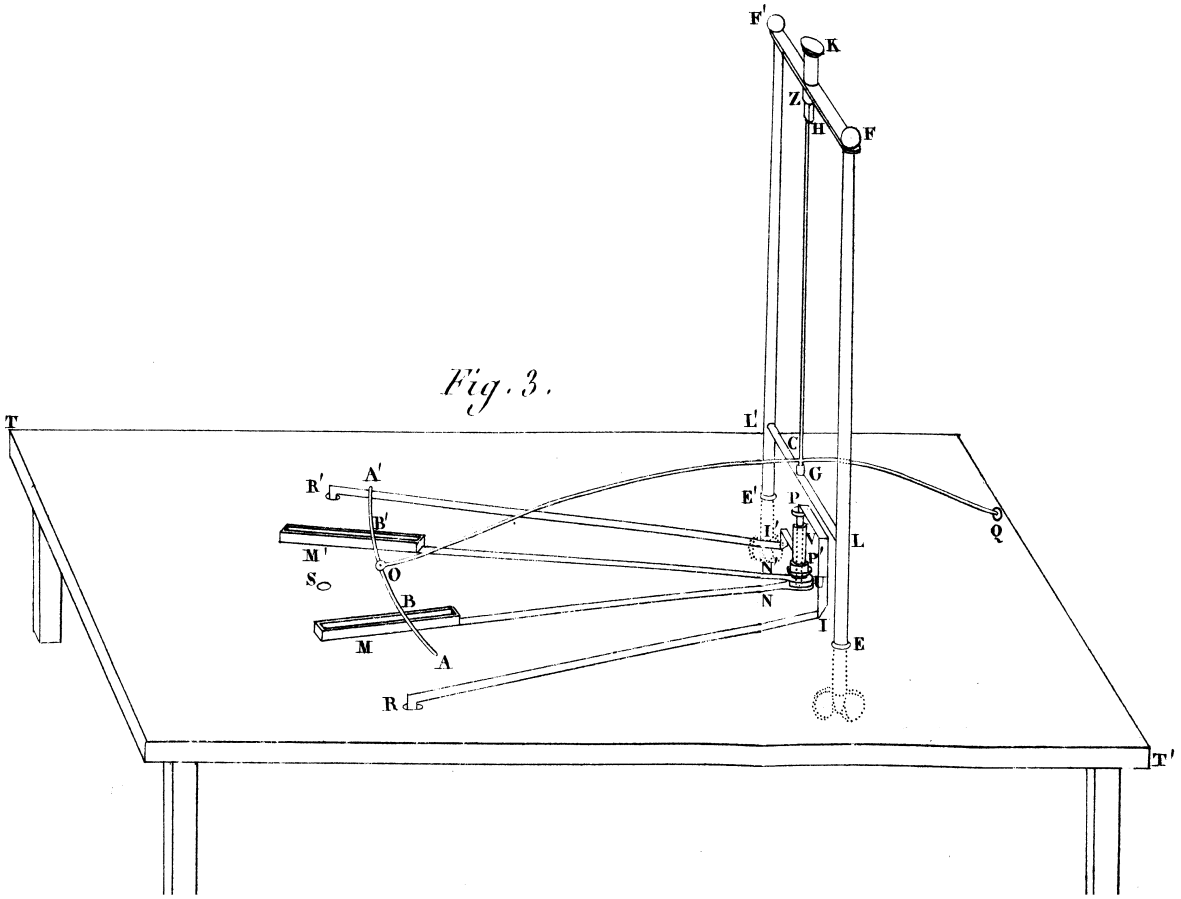

Fig. 3.

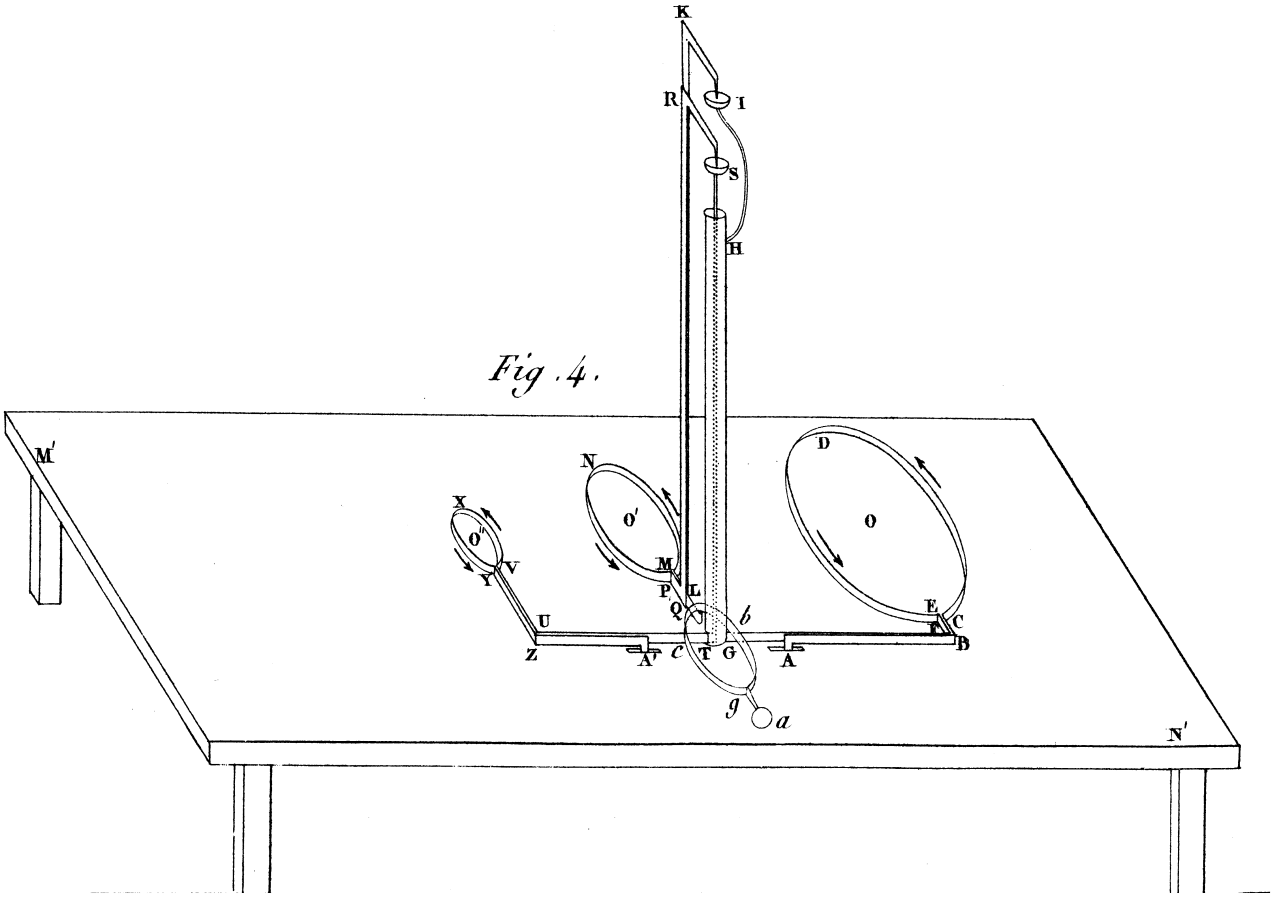

Fig. 4.

Fig. 5.

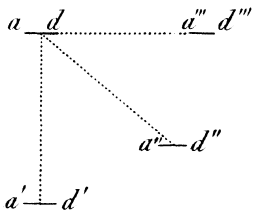

Fig. 6.

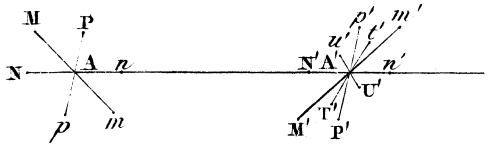

Fig. 7.

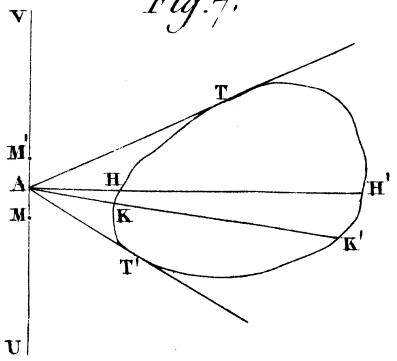

Fig. 8

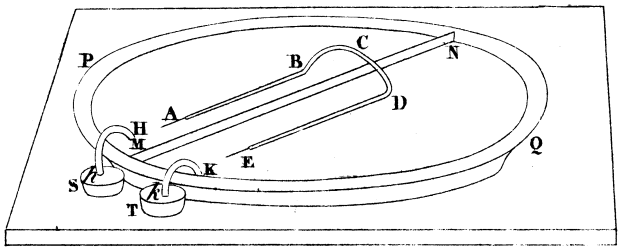

Fig. 9.

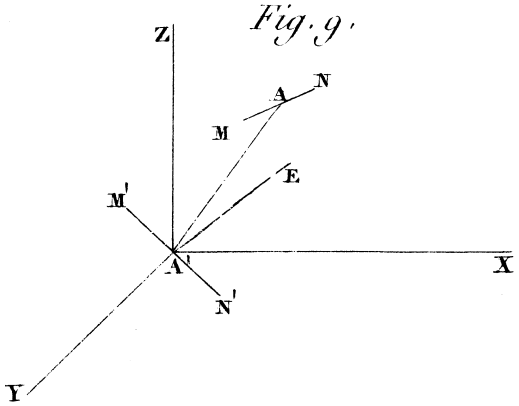

Fig. 10.

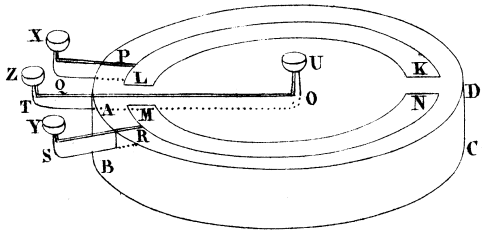

Fig. 11.

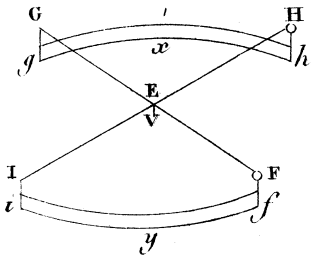

Fig. 12.

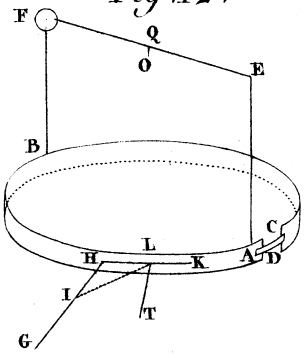

Fig. 13.

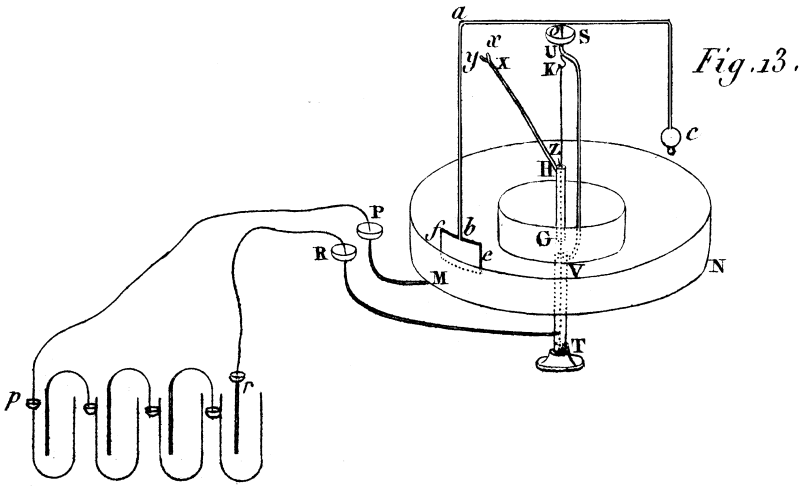

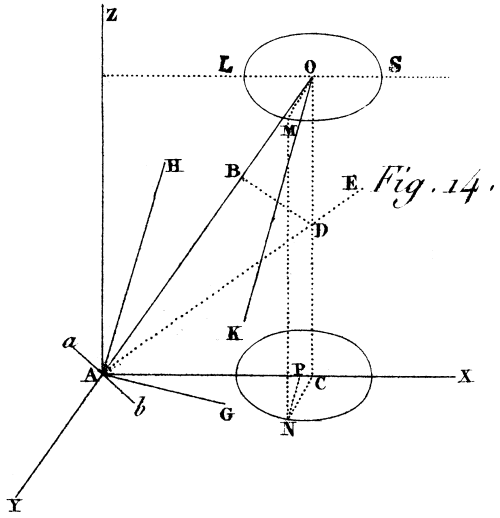

Fig. 14.

Fig. 15.

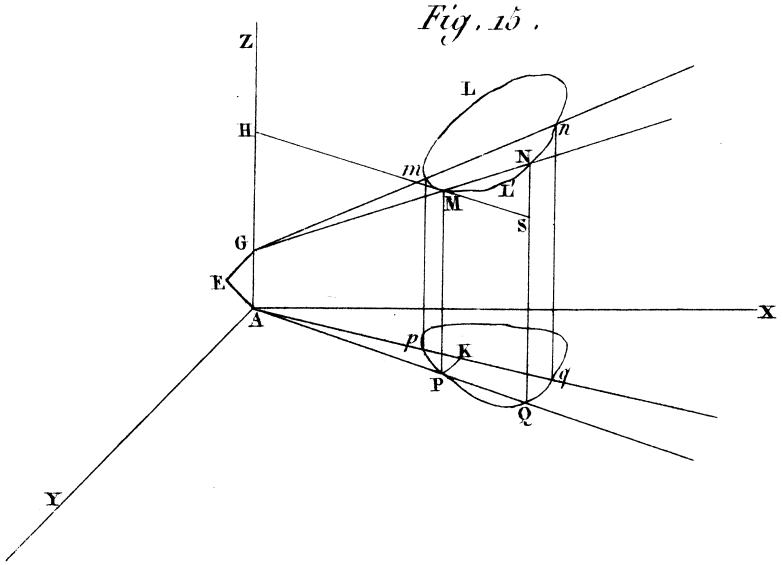

Fig. 16.

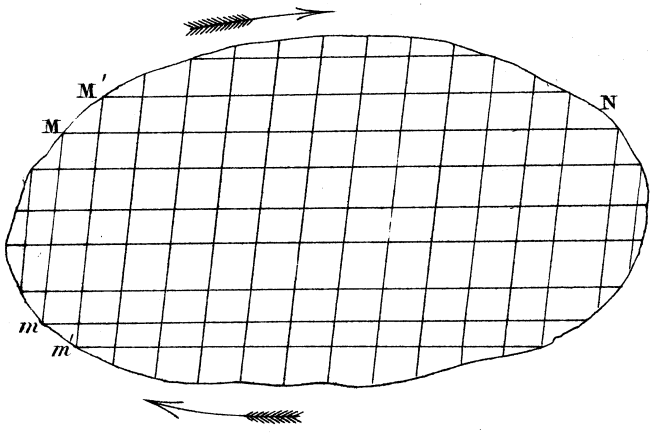

Fig. 17.

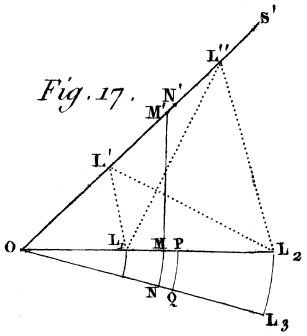

Fig. 18.

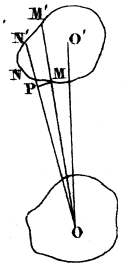

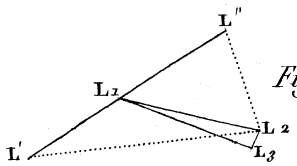

Fig. 19

Fig. 20.

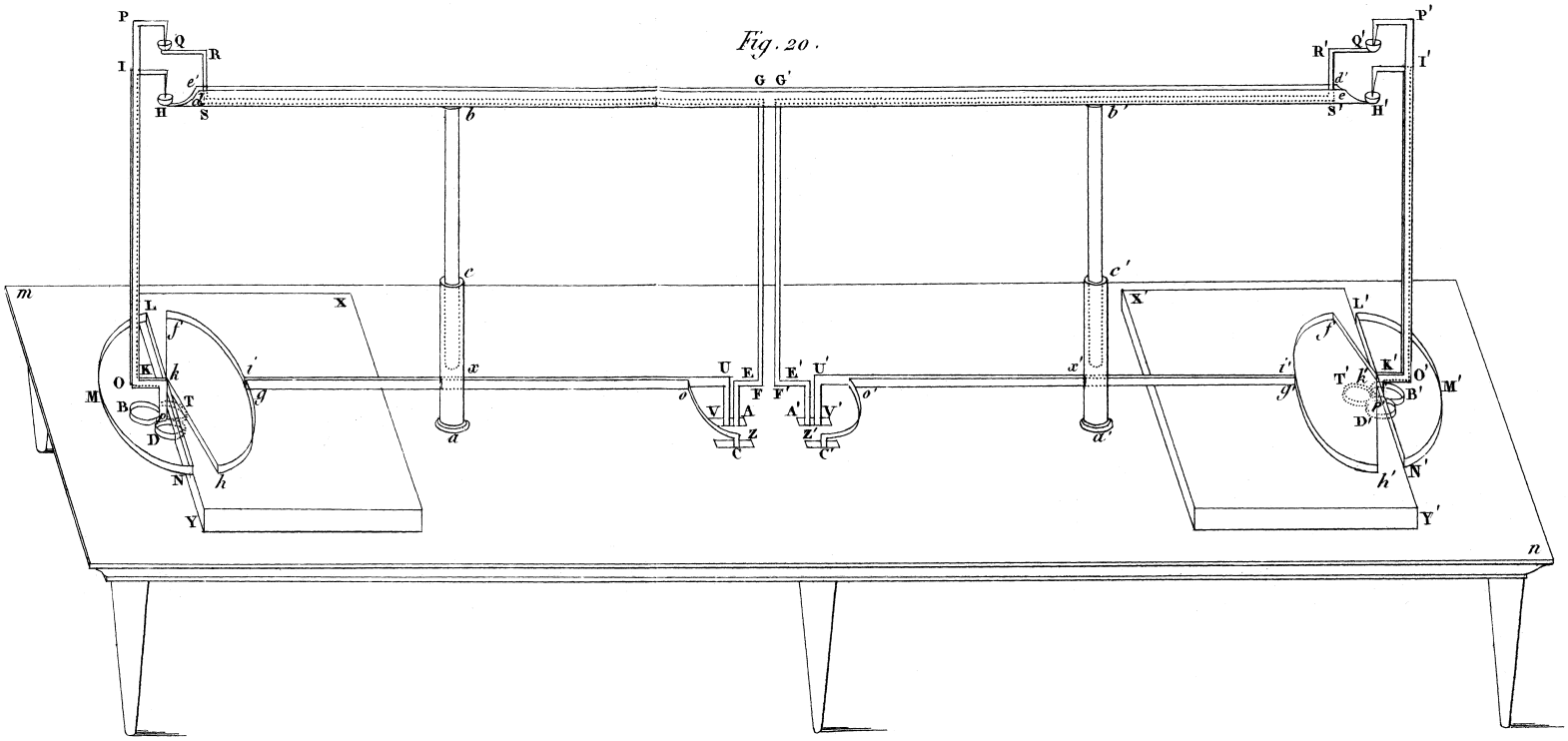

Fig. 21.

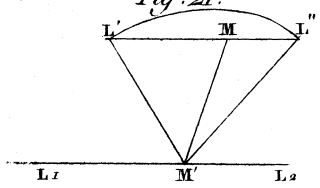

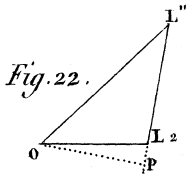

Fig. 22.

Fig. 23.

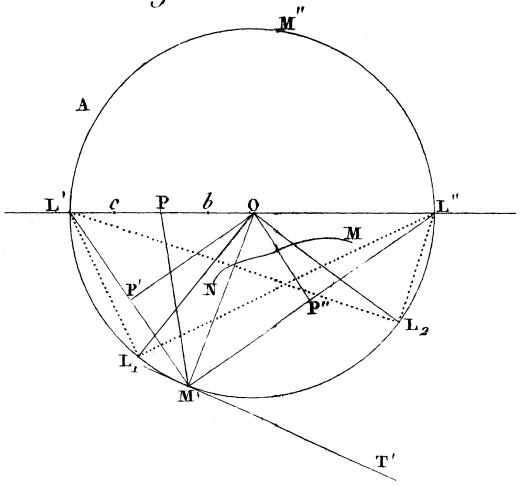

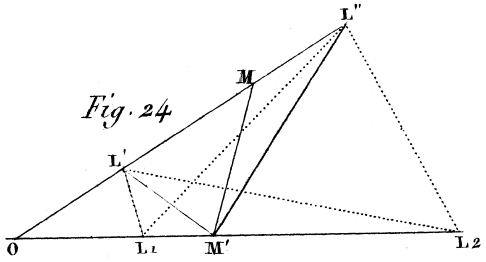

Fig. 24

Fig. 25.

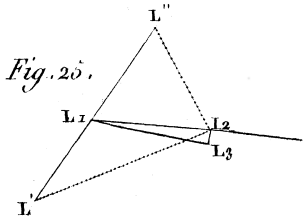

Fig. 26.

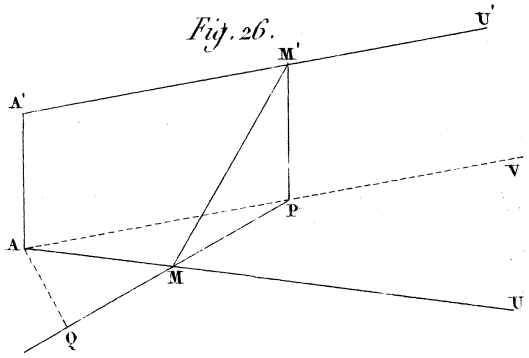

Fig. 27.

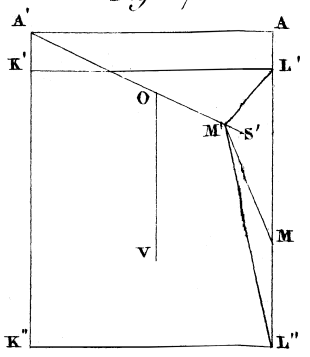

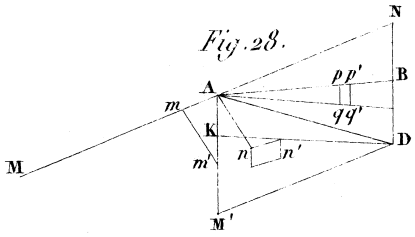

Fig. 28.

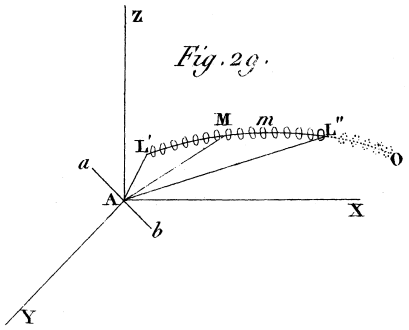

Fig. 29.

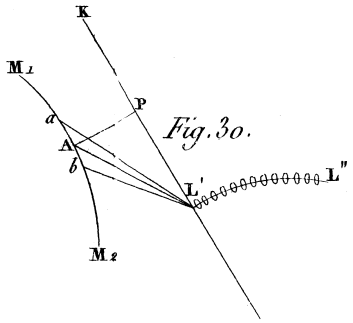

Fig. 30.

Fig. 31.

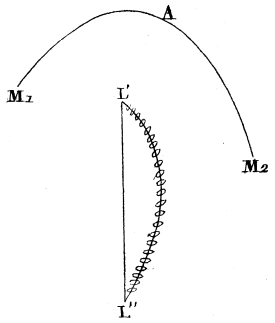

Fig. 32.

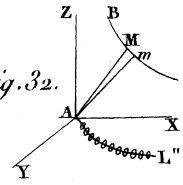

Fig. 33.

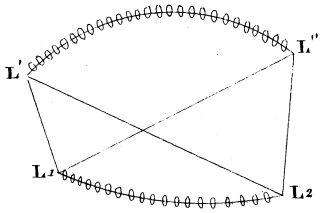

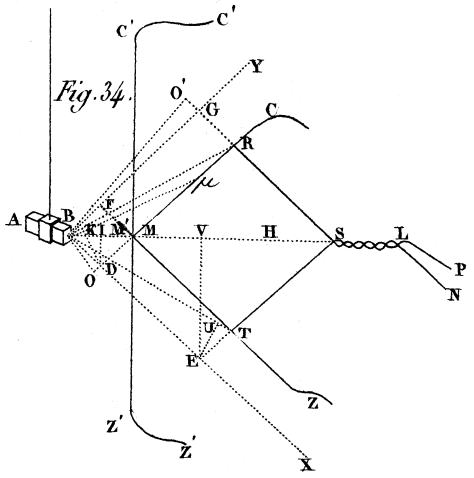

Fig. 34.

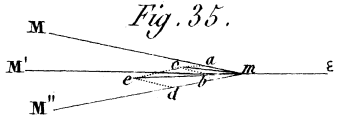

Fig. 35.

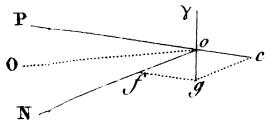

Fig. 36.

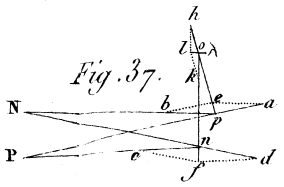

Fig. 37.

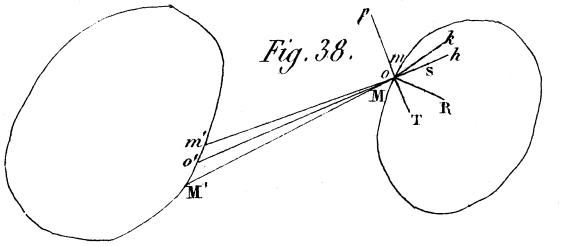

Fig. 38.

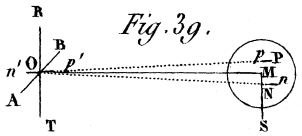

Fig. 39.

Fig. 40.

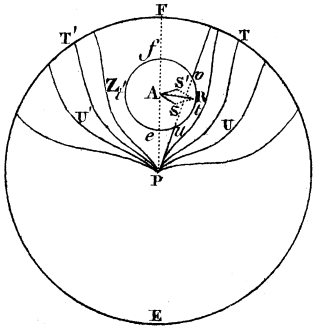

Fig. 41.

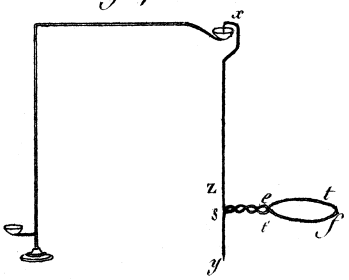

Fig. 42.

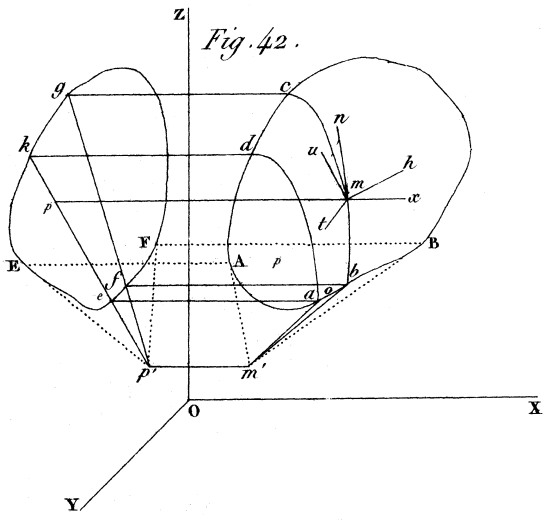

Fig 43.

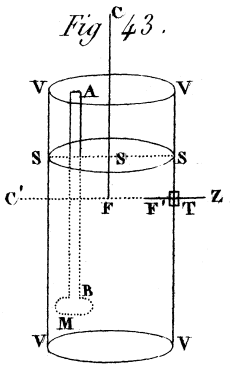
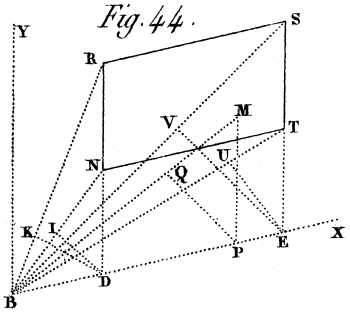
Fig. 44.